DESCRIPTION: POLES, MAGNET AND BLOCKS ASSY
CATEGORY: ASSEMBLY PROJECT: ProjectXInjectorExperiment

REV	REVISION CONTROL DOCUMENT	DATES	SIGNATURES	
-	F10001726---RCD		DRAWN	
			APPROVED	

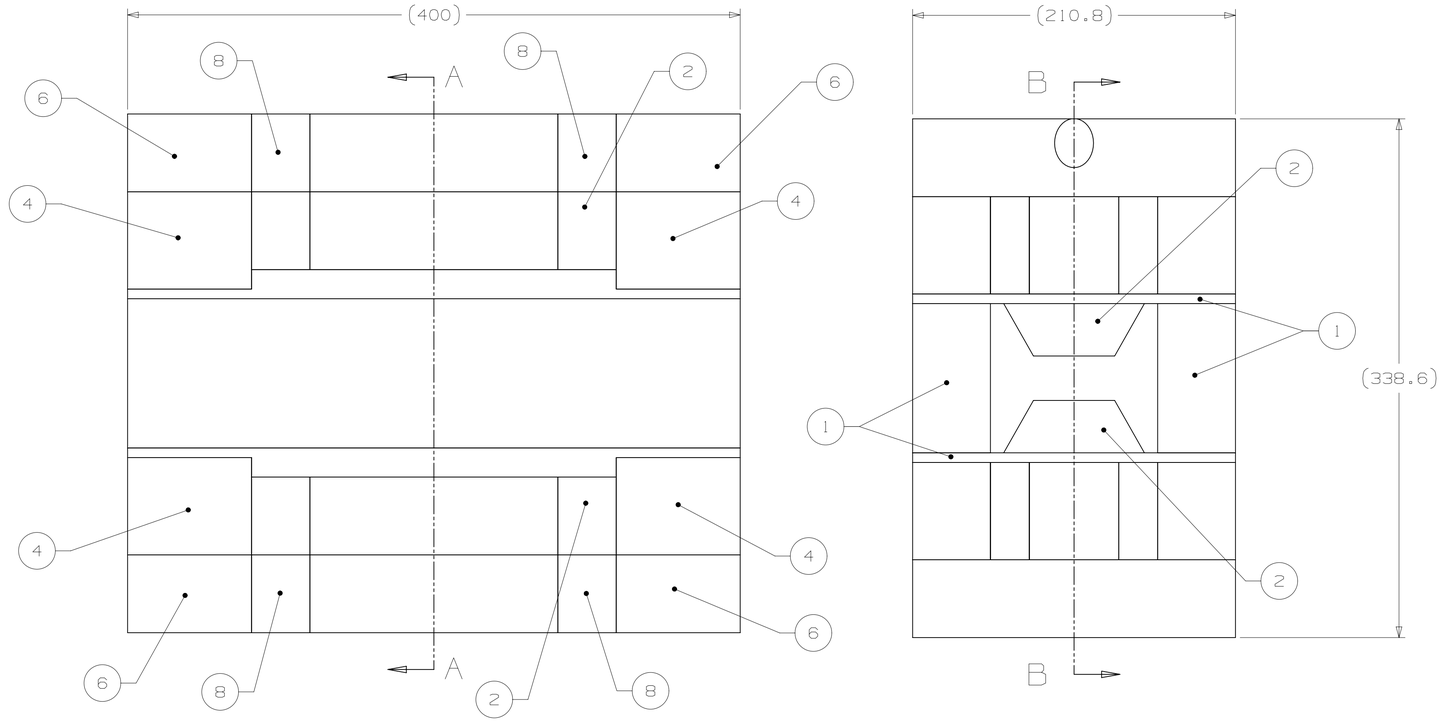

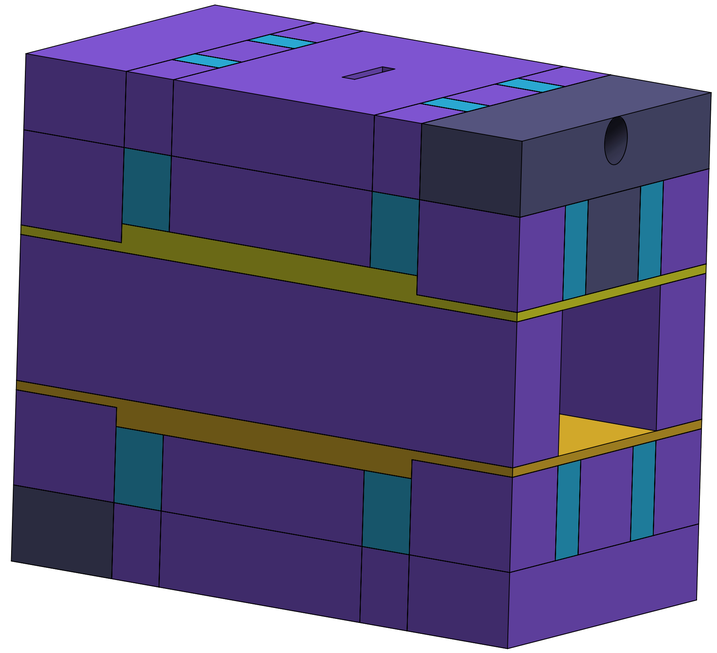

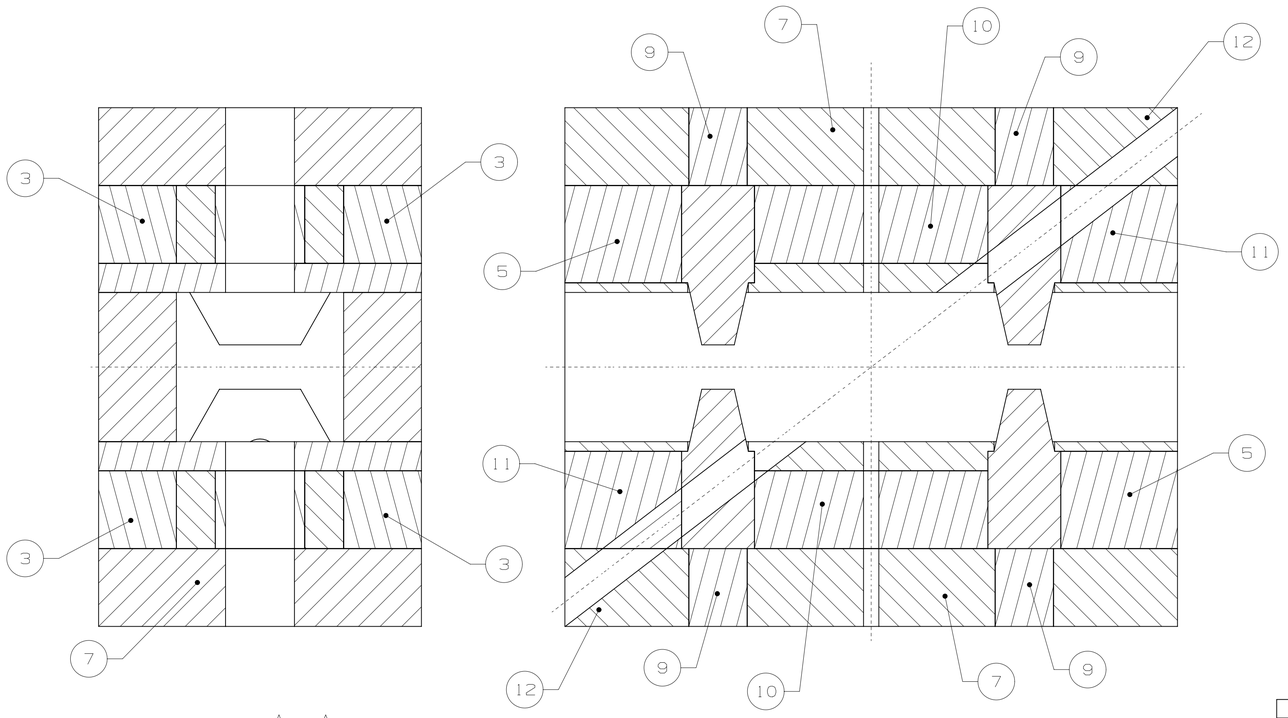

SECTION A - A

SECTION B - B

ITEM	PART NUMBER	DESCRIPTION	QTY
12	F10002143	BLOCK, END UPPER MAGNET W/HOLE	2
11	F10002126	BLOCK, END LOWER MAGNET	2
10	F10002128	BLOCK, MIDDLE MAGNET W/HOLE	2
9	F10001755	BLOCK, MIDDLE CENTER UPPER MAGNET	4
8	F10001754	BLOCK, MIDDLE SIDE UPPER MAGNET	8
7	F10001753	BLOCK, MIDDLE UPPER MAGNET	2
6	F10001752	BLOCK, END UPPER MAGNET	4
5	F10001749	BLOCK, END LOWER MAGNET	4
4	F10001747	BLOCK, END MAGNET	8
3	F10001744	BLOCK, MIDDLE LOWER MAGNET	2
2	F10001756	POLES AND MAGNET ASSY	2
1	F10001757	POLES AND MAGNET SUPPORT ASSY	1

PART LIST

UNLESS OTHERWISE SPECIFIED

±X	±X.X	±X.XX	±X/X	±X°
--	--	--	N/A	1°

BREAK ALL SHARP EDGES .015 MAX.
DO NOT SCALE DRAWING
DIMENSIONS BASED ON ASME Y14.5M-1994
MAX. ALL MACH SURFACES 3.2
DRAWING UNITS: MM

DRAWN	N.TANOVIC	DATE	22-Aug-2012
CHECKED		DATE	
APPROVED		DATE	
USED ON			
MATERIAL	SEE PARTS LIST		
GROUP: Technical Division Design and Drafting		CAGE CODE: 0U5R6	

FERMI NATIONAL ACCELERATOR LABORATORY
UNITED STATES DEPARTMENT OF ENERGY

NAME: POLES, MAGNET AND BLOCKS ASSY

SCALE	SIZE	DRAWING NUMBER	SHEET	REV
1:2 AS SHOWN	A1	F10001726	1 OF 1	-