DESCRIPTION: POLES AND MAGNET SUPPORT ASSY
CATEGORY: ASSEMBLY PROJECT: ProjectXInjectorExperiment

REV	REVISION CONTROL DOCUMENT	DATES	SIGNATURES	
-	F10001757---RCD		DRAWN	
			APPROVED	

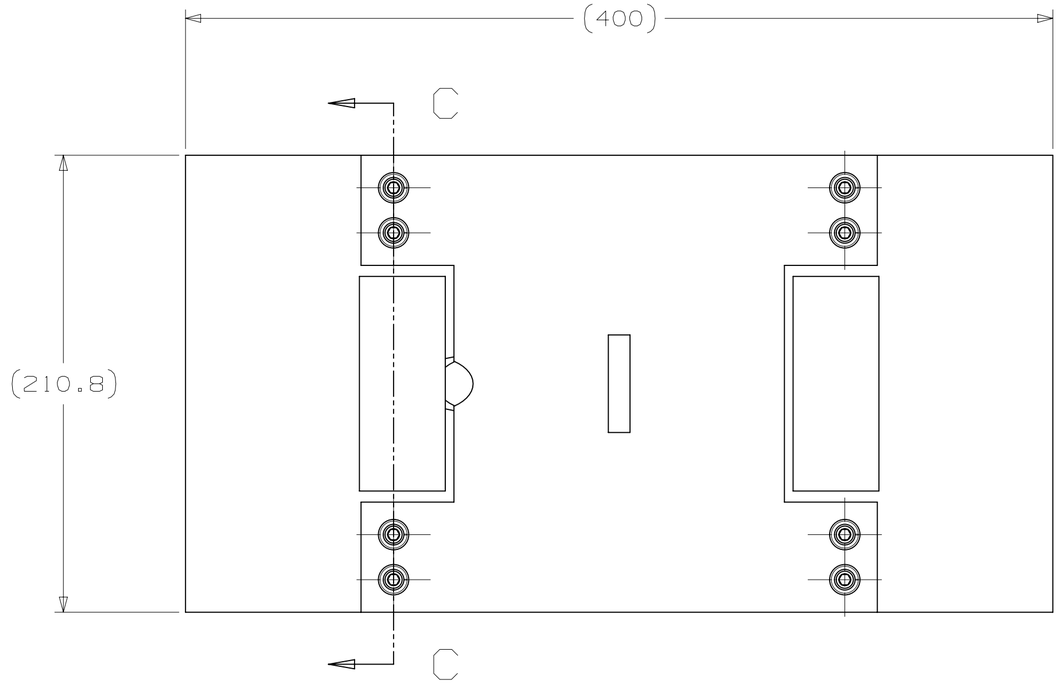

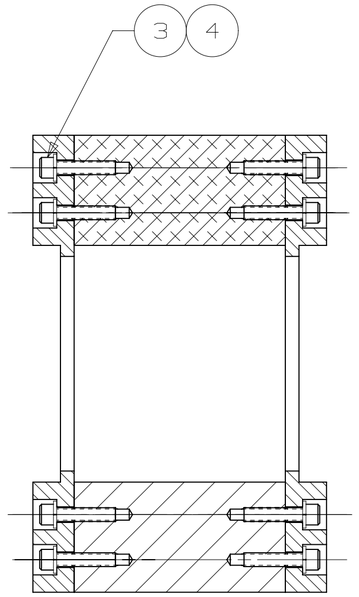

SECTION C - C

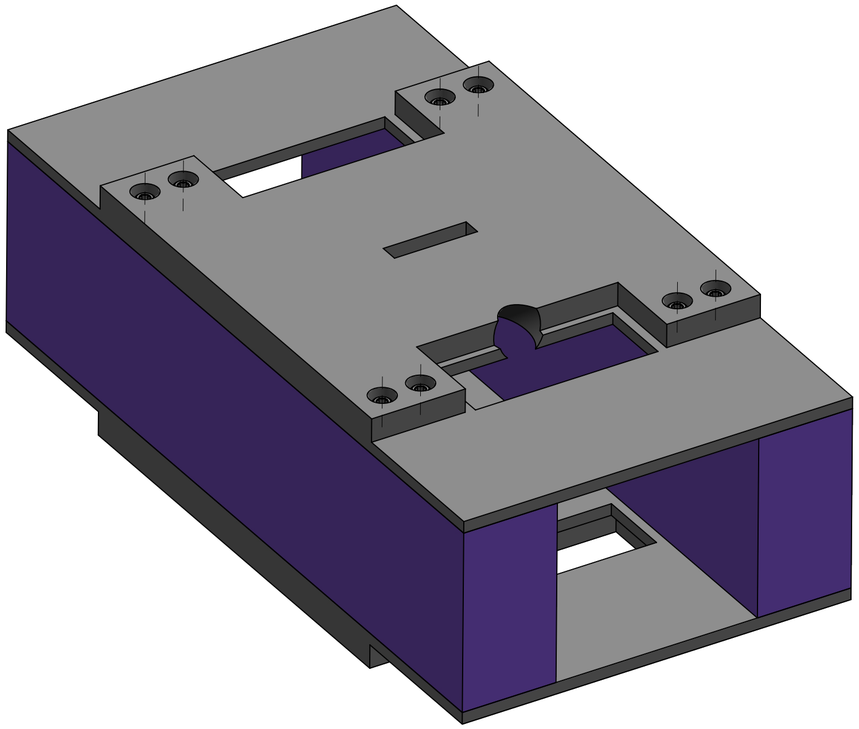

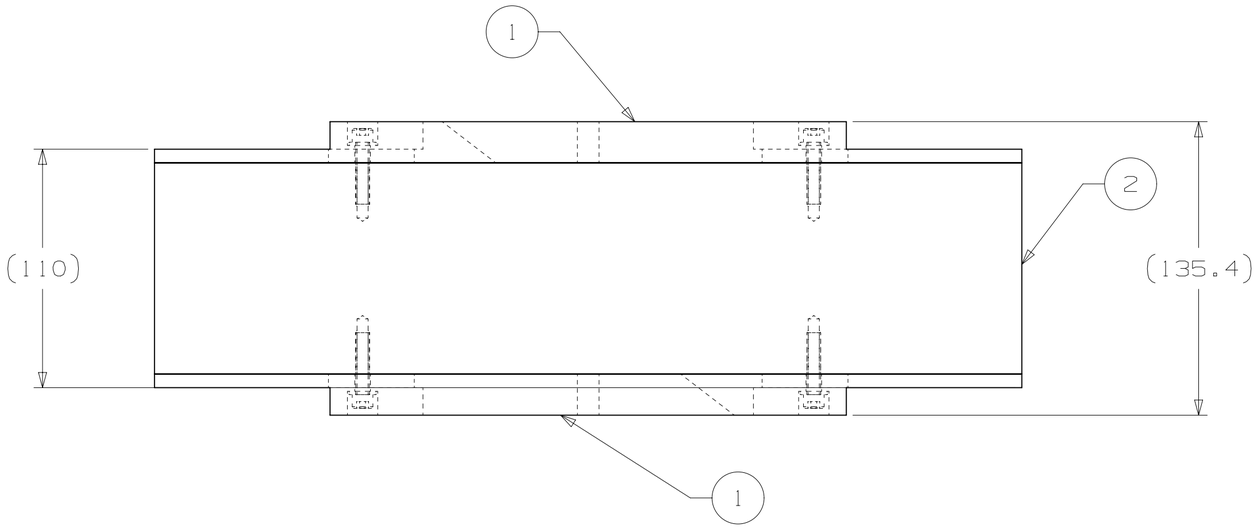

ITEM	PART NUMBER	DESCRIPTION	QTY
4	FC0003348	SHCS,1/4-20x1.125LGx1T,SS18-8	16
3	FC0016375	WASHER-SPLIT,1/4-0.254x0.49x0.06,SS18-8	16
2	F10001804	BLOCK, STRUCTURE SUPPORT	2
1	F10001725	PLATE, STRUCTURE SUPPORT	2

PART LIST

NOTES (UNLESS OTHERWISE SPECIFIED):

1. ASSEMBLY MUST BE FREE OF DIRT, GREASE, OIL & CHIPS.
2. ASSEMBLY TO BE FREE OF ALL SHARP EDGES, CORNERS, AND BURRS.

UNLESS OTHERWISE SPECIFIED

±X	±X.X	±X.XX	±X/X	±X°
0.3	0.1	.012	N/A	1°

BREAK ALL SHARP EDGES .015 MAX.
DO NOT SCALE DRAWING
DIMENSIONS BASED ON ASME Y14.5M-1994
MAX. ALL MACH SURFACES 3.2
DRAWING UNITS: MM

DRAWN	N.TANOVIC	DATE	22-Aug-2012
CHECKED		DATE	
APPROVED		DATE	

USED ON: F10001726

MATERIAL: SEE PARTS LIST

GROUP: Technical Division Design and Drafting | CAGE CODE: 0U5R6

FERMI NATIONAL ACCELERATOR LABORATORY
UNITED STATES DEPARTMENT OF ENERGY

NAME: POLES AND MAGNET SUPPORT ASSY

SCALE	SIZE	DRAWING NUMBER	SHEET	REV
1:2 AS SHOWN	A2	F10001757	1 OF 1	-