CDF Offline Computing

Stephen Wolbers, Fermilab

October 18, 2001

Outline

- **Overview**
- **CS/L**
- **Farms**
- **ORACLE servers**
- **Central Systems**
- **Robot(s)**
- **Networks**

CS/L

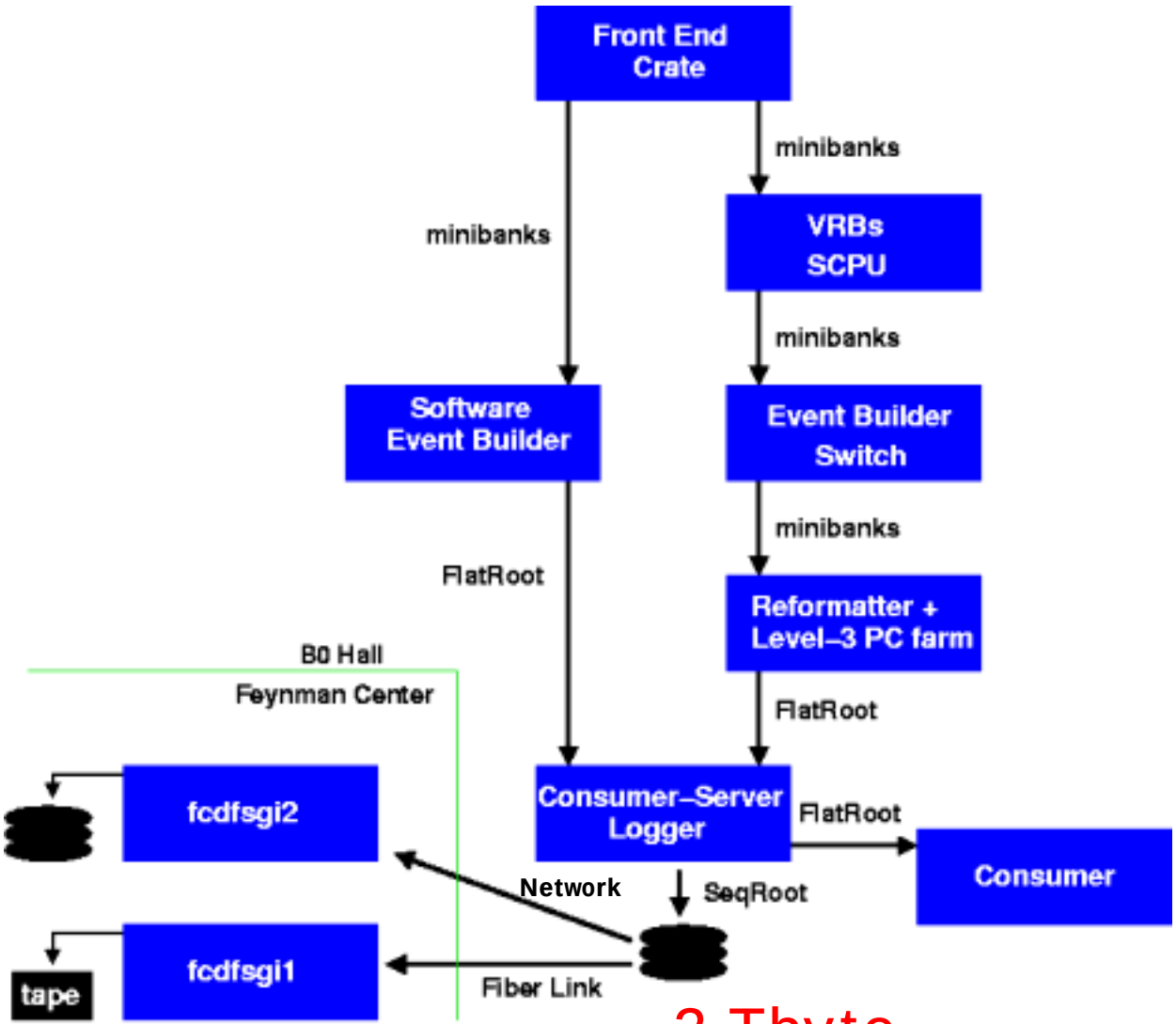
Front End Crate
minibanks
minibanks
VRBs SCPU
minibanks
Software Event Builder
Event Builder Switch
minibanks
FlatRoot
Reformatter + Level–3 PC farm
B0 Hall
Feynman Center
FlatRoot
fcdfsgi2
Consumer–Server Logger
FlatRoot
Consumer
Network
SeqRoot
fcdfsgi1
tape
Fiber Link

~2 Tbyte

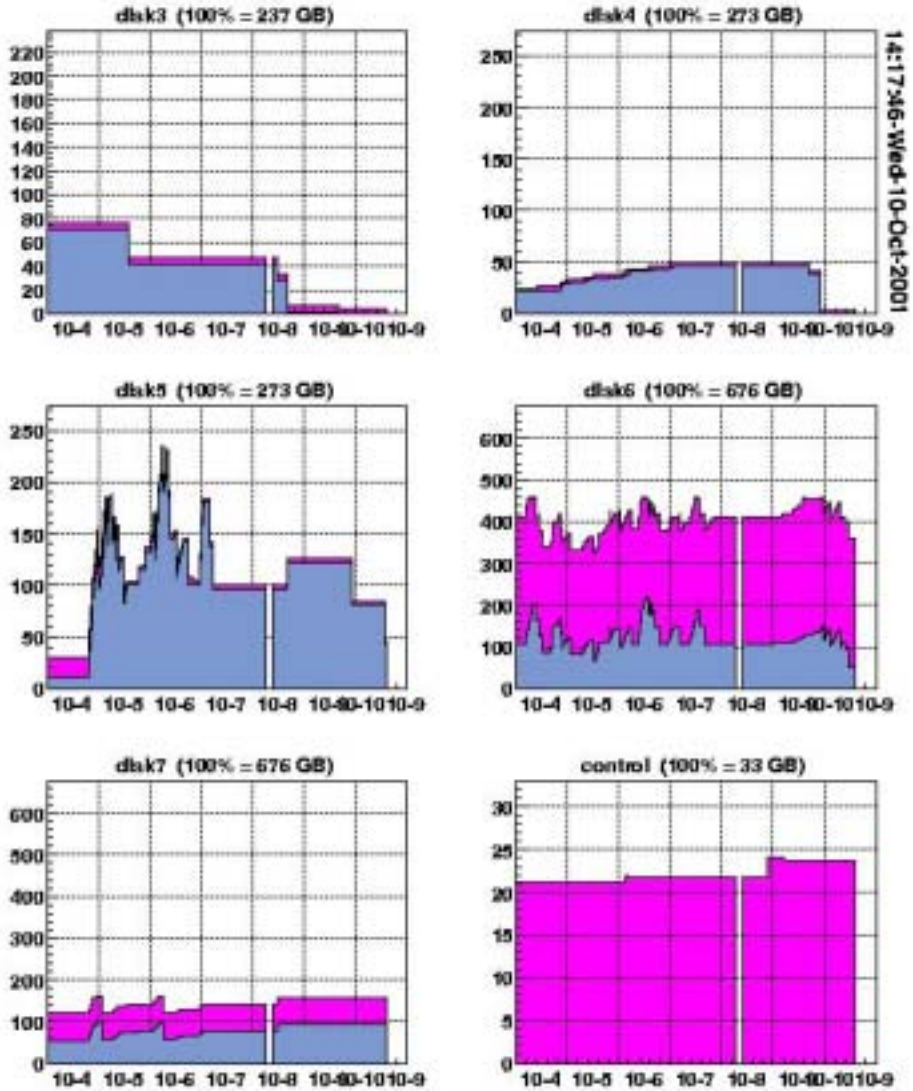
dlak3 (100% = 237 GB)
dlak4 (100% = 273 GB)
14:17:46-Wed-10-Oct-2001
dlak5 (100% = 273 GB)
dlak6 (100% = 676 GB)
dlak7 (100% = 676 GB)
control (100% = 33 GB)
10-4 10-5 10-6 10-7 10-8 10-90-10 10-9

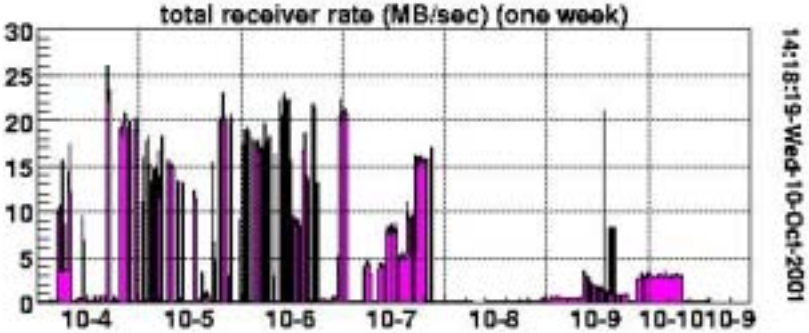
total receiver rate (MB/sec) (one week)
14:18:19-Wed-10-Oct-2001

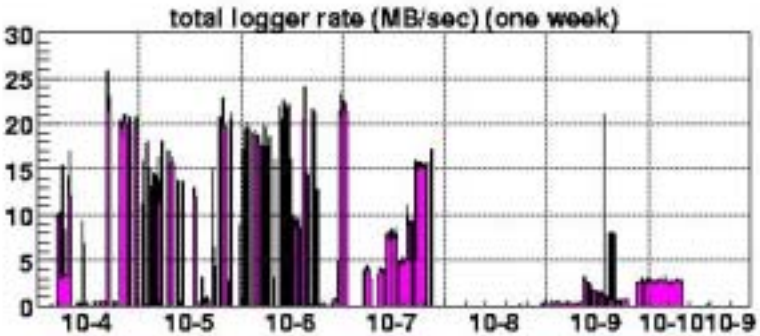
total logger rate (MB/sec) (one week)

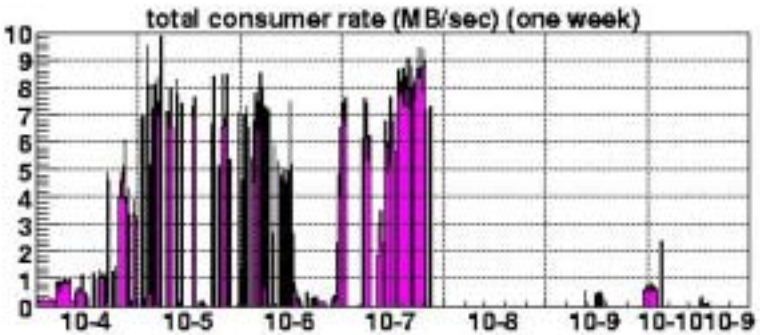
total consumer rate (MB/sec) (one week)

number of events logged (24 hours)
14:18:19-Wed-10-Oct-2001

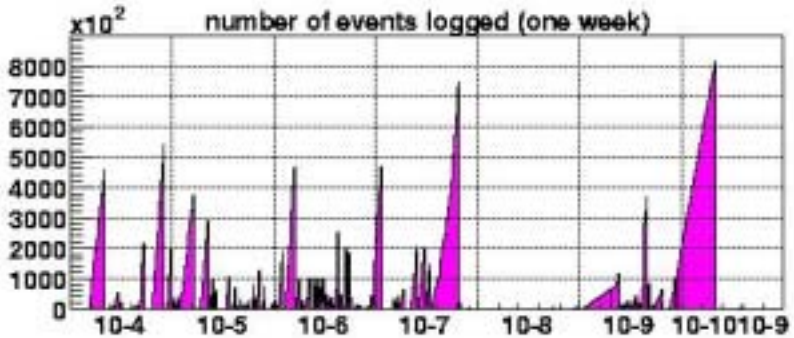
number of events logged (one week)

Status of CDF Farms Hardware

- **154 PC's are in place.**
  - 50 PIII/500 duals (couple of years old)
  - 40 PIII/800 duals (1 year old)
  - 64 PIII/1 GHz duals (recent arrivals)
  - Equivalent to 488 PIII/500 CPU's
    - Compare to 375 estimated need for full-rate Run 2
- **2 I/O nodes, both SGI O2000**
  - fcdfsgi1 (shared with data logging)
    - 4 CPU (300 MHz)
    - 2 Tbyte of disk for I/O
  - cdffarm1
    - 4 CPU (400 MHz)
    - 1 Tbyte of disk for concatenation

500 MHz duals

800 MHz
1 GHz

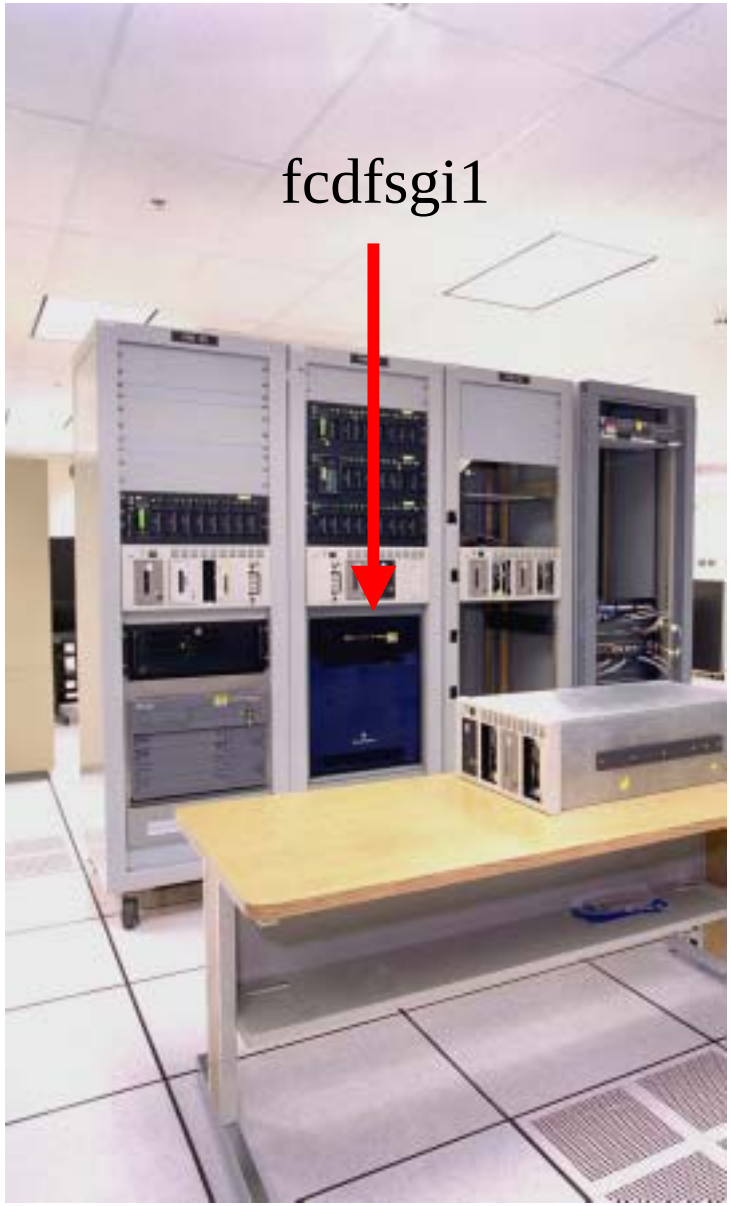
fcdfsgi1

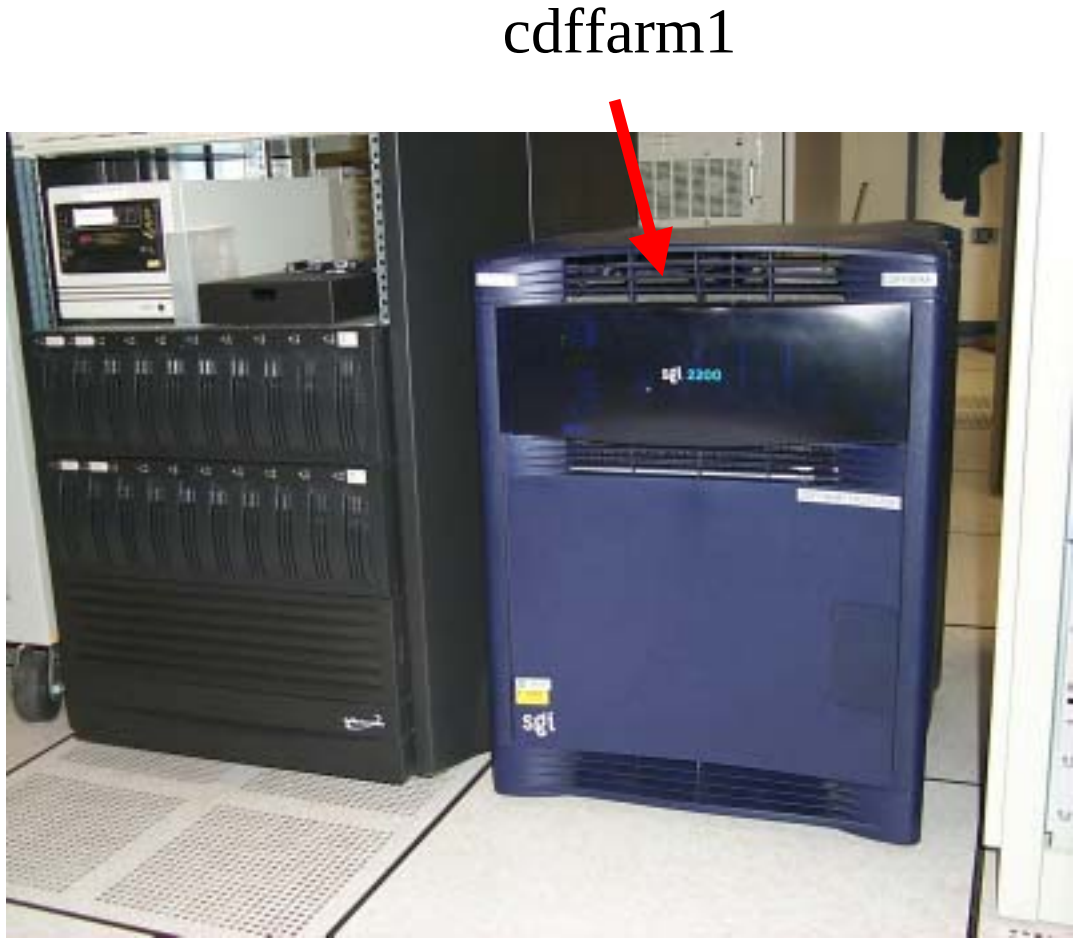
cdffarm1
sgi 2200
sgi

Run II CDF PC Farm

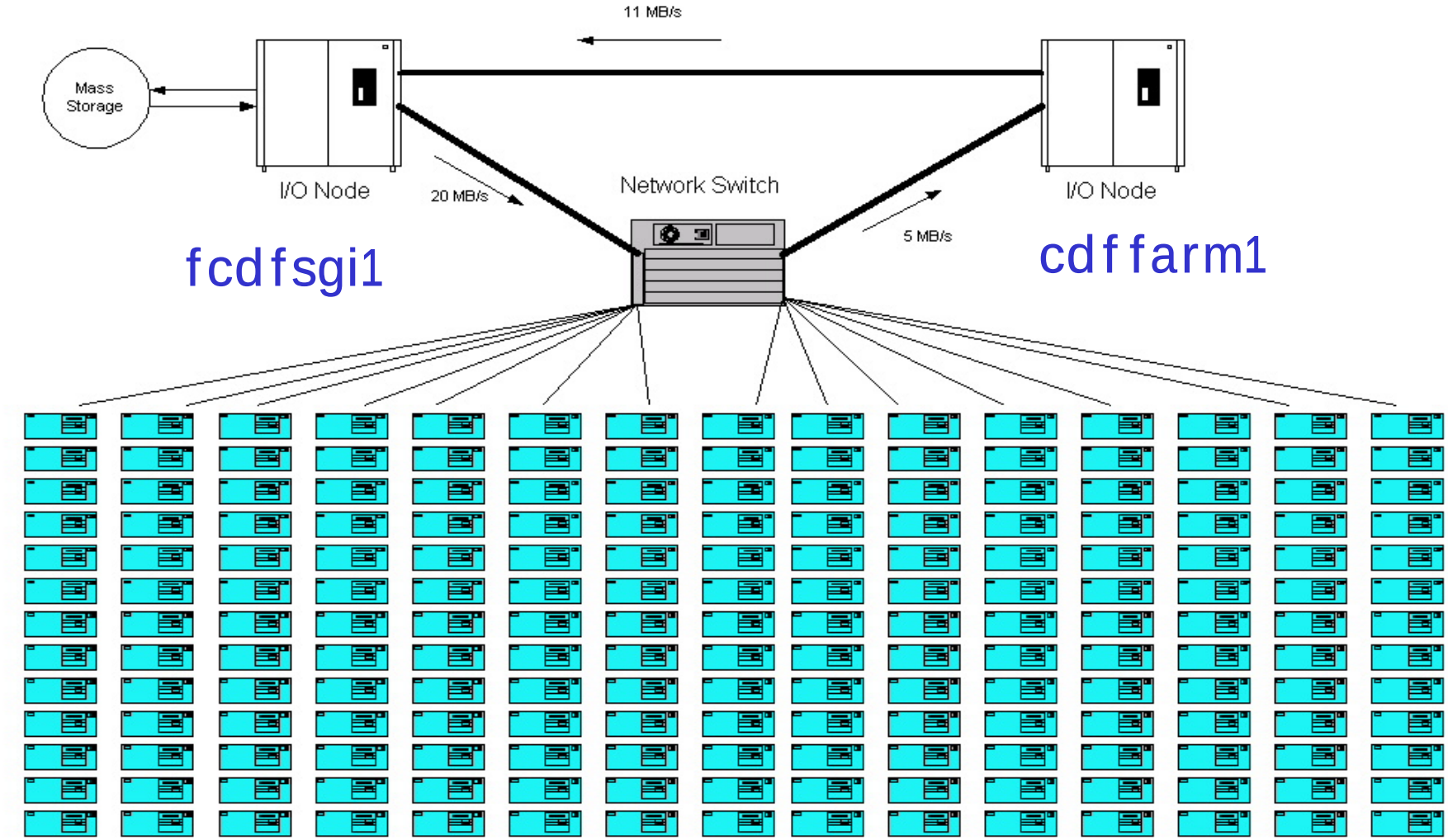

ORACLE servers and build machine

- **2 ORACLE servers**
  - fcdfora1, SUN E4500
    - 2 Ultrasparc II 400 MHz processors
    - 1.2 Gbyte RAM
    - 100 Mbit ethernet
    - 500 Gbyte of RAID
    - exabyte M2 stacker for backup
  - fcdfora2, SUN E4500, similar to fcdfora1
- **8-way PC for code builds**
  - cdfpca, 8 processors, 700 MHz, 2 GB memory
  - Local disk, 72 GB, RAID 0 (striped)
  - NFS mounted /cdf/home and /cdf/spool

fcdfora1
fcdfora2

cdfpca

Central Analysis Systems

- **fcdfsgi2**
  - SGI O2000
  - 64 300 MHz R12000 processors
  - 32 Gbyte main memory
  - Gbit network interface
  - Disk
    - Local SCSI disk for system
    - Local SCSI RAID disk for /cdf/code (300 Gbyte)
    - Local SCSI RAID disk for /cdf/scratch (500 Gbyte)
    - Fibrechannel disk (33 Tbyte) exists or is in the process of being installed.
      - RAID5, FC hub, FC interface to fcdfsgi2
      - ~4-5 Tbyte DIM now
      - ~4 Tbyte physics groups now
    - NFS /cdf/home (270 Gbyte), /cdf/spool (645 Gbyte)
      - Accessed with 100 Mbit point-to-point connections

50 Gbyte disks
fcdfsgi2

CDF Run II
50 Gbyte disks
180 Gbyte disks

More central machines

- **fcdflnx1**
  - 4 700 MHz PIII
  - 4 Gbyte main memory
  - Local /cdf/scratch (500 Gbyte)
  - Local /cdf/code planned
  - NFS mounted /cdf/home, /cdf/spool
- **fcdfsun1**
  - SUN SPARCengine Ultra AXmp
  - 4 300 MHz Ultrasparc II
  - 1.5 Gbyte main memory
  - Local /cdf/code, /cdf/scratch
  - NFS /cdf/home, /cdf/spool

CDF Run II
FCDFLNX1
fcdflnx1
FCDFSUN1
fcdfsun1

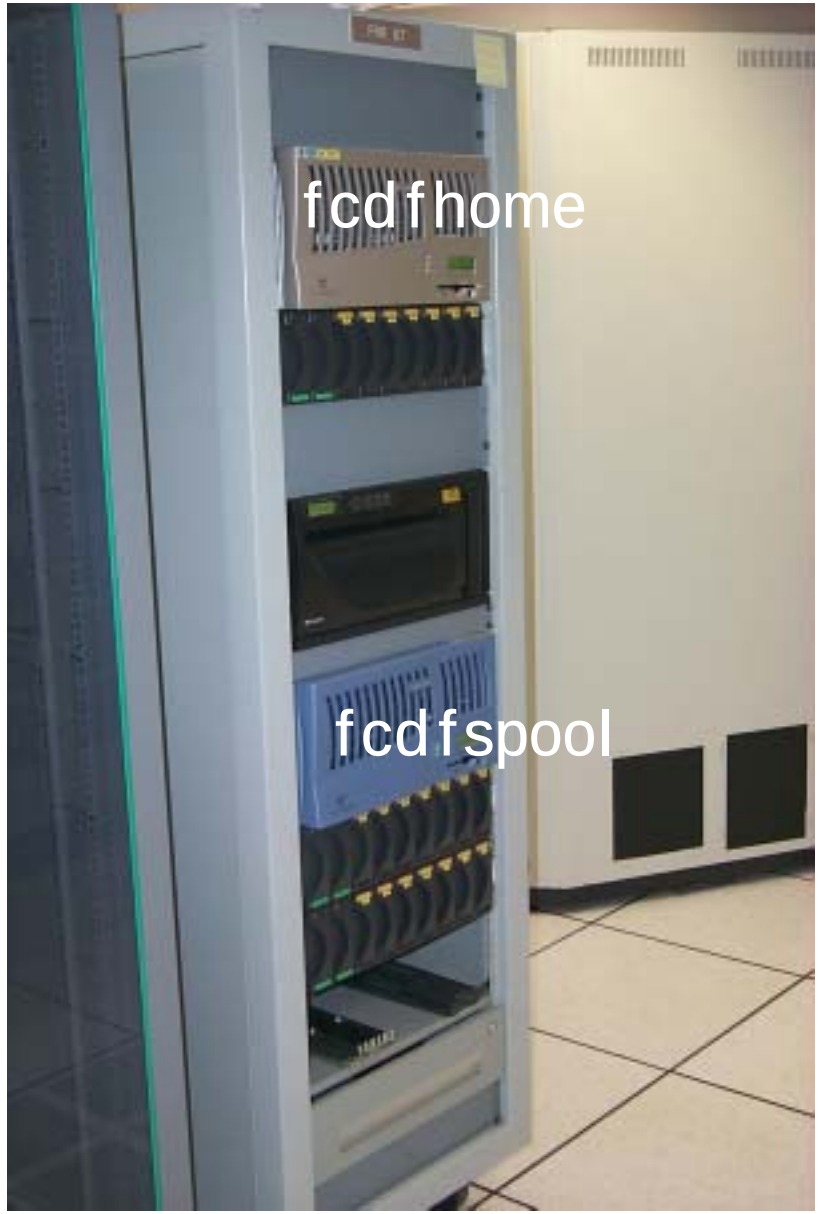
fcdfhome
fcdfspool

Home and Spool

- **Network Appliance 740 and 840**
  - Netapp 840
    - /cdf/home
    - 270 Gbyte
    - 4 100 Mbit ethernet point-to-point connections
      - fcdfsgi2, fcdfsun1, fcdfsgi1, fcdflnx1
    - 100 Mbit connection to the offline switch
  - Netapp 740
    - /cdf/spool
    - 645 Gbyte
    - 4 100 Mbit connections
    - 100 Mbit to switch

Robots

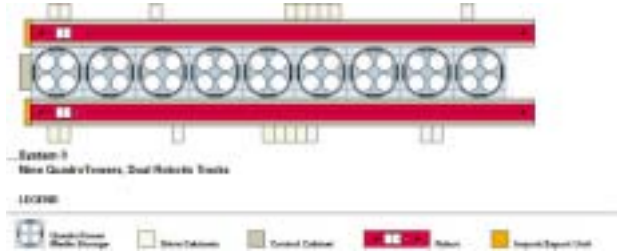

- **CDF uses 2 robots**
  - ADIC AML/2
    - 4 quadratowers
    - Configurable to use many types of tape technology
  - STK powderhorn silo
    - 7000 slots
    - Can use IBM or STK tapedrives
    - Latest is STK 9940 (60 Gbyte tapes)

AML/2

STK

Networks

- **CDF has 4 big (Cisco 6509) switches:**
  - Farm
  - Central machines
  - Online
  - Portakamps
- **Each switch has gigabit and 100 Mbit capability, configurable with modules.**
- **9 modules/switch**
  - 1 to link to other switches
  - 8 available
    - Up to 16 gigabit or 48 100 Mbit per module
    - This changes as new modules get released by Cisco
- **Backplane has something like 256 Gbytes/sec of bandwidth.**

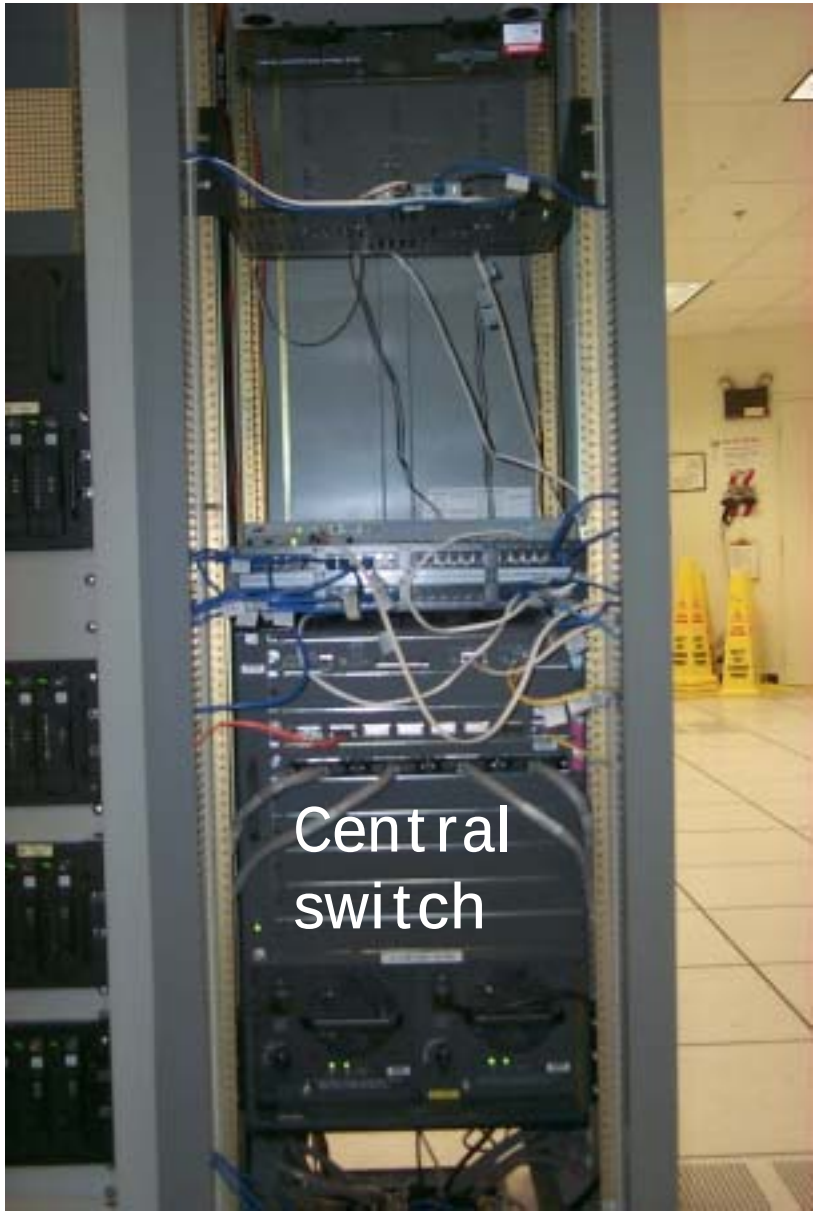
Central
switch

Farm Switch
S2M7 S2M7

CDF Run-II Network Topology

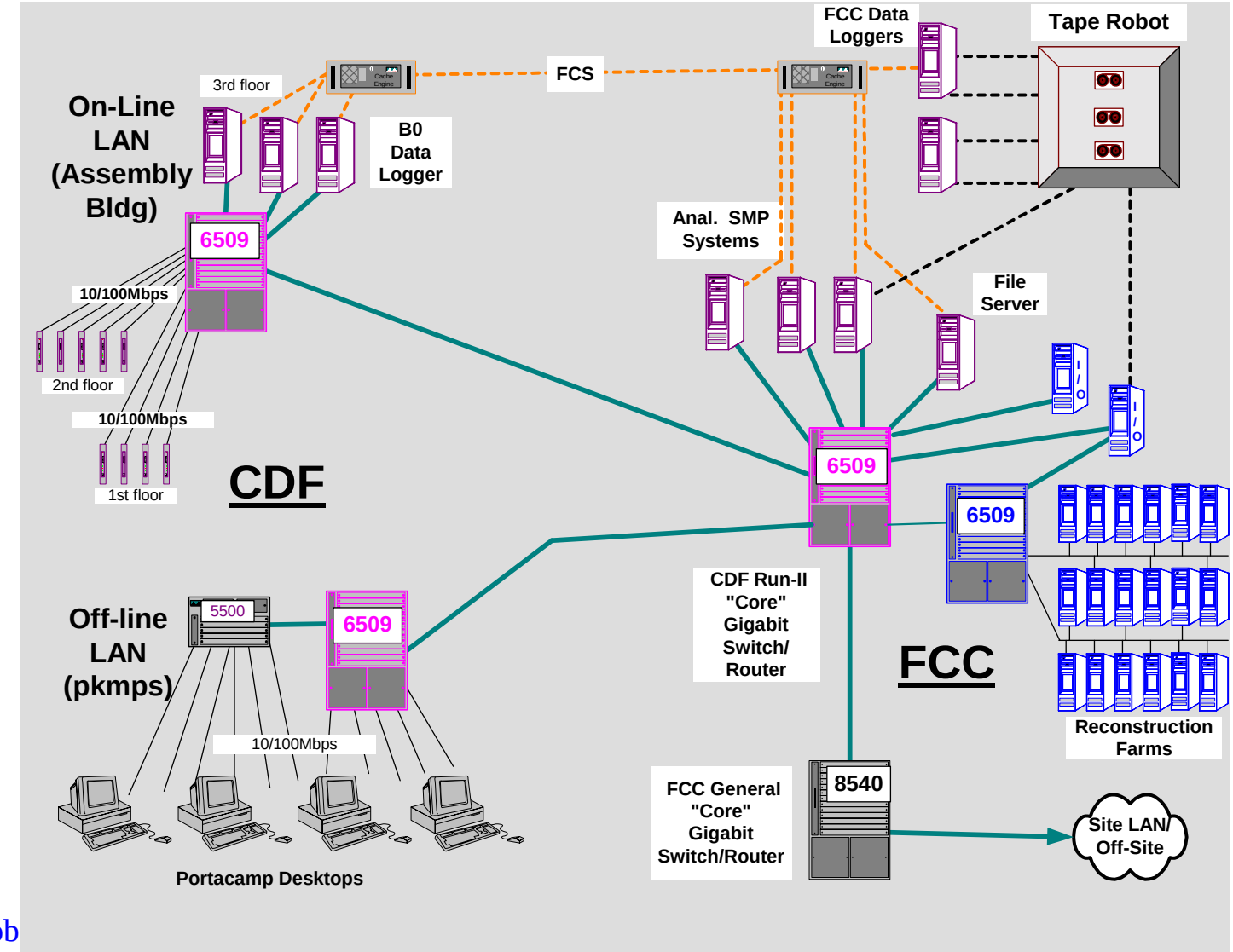

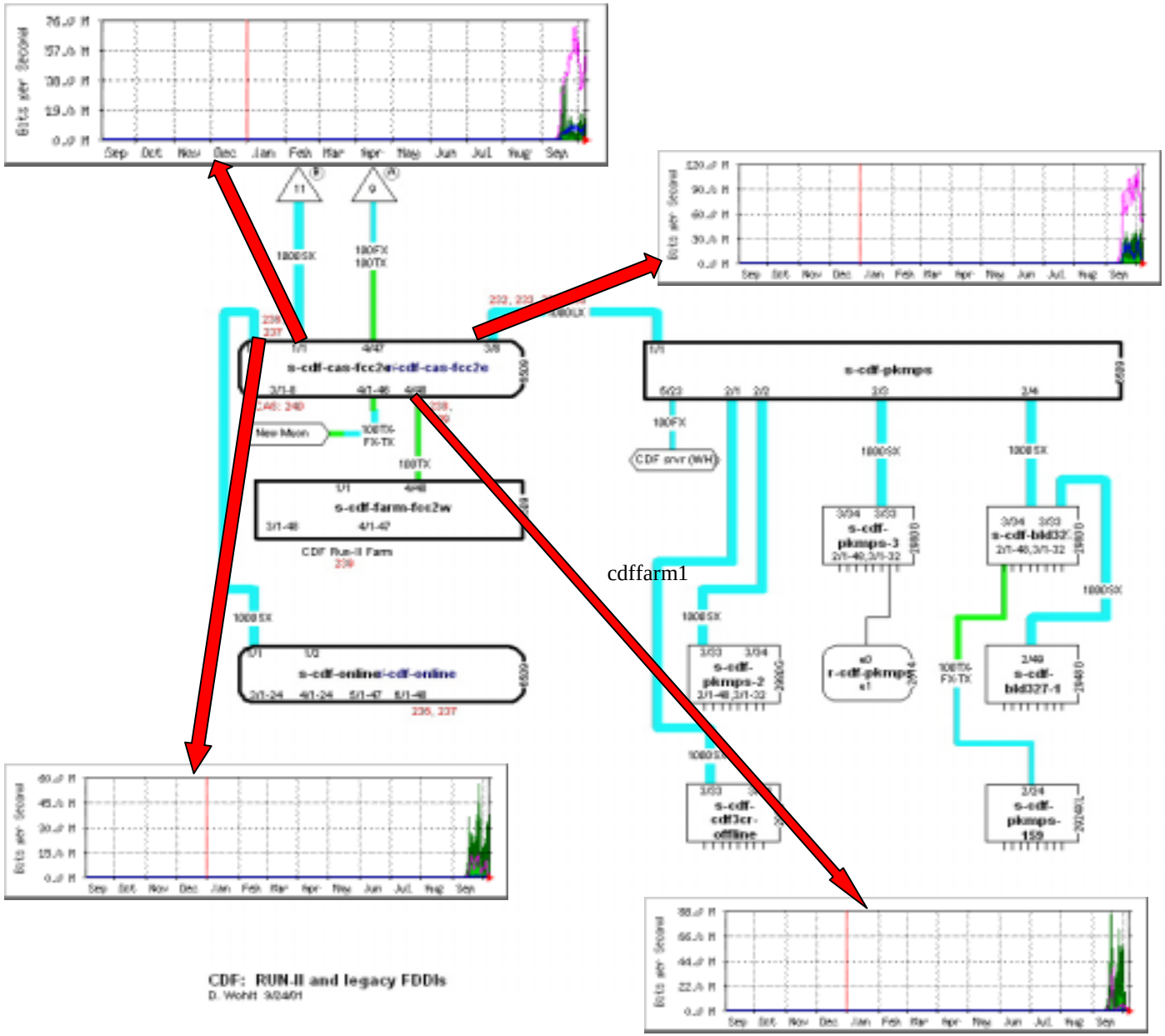
Bits per Second
Sep Oct Nov Dec Jan Feb Mar Apr May Jun Jul Aug Sep
s-cdf-cas-fcc2e-cdf-cas-fcc2e
s-cdf-farm-fcc2w
CDF Run-II Farms
s-cdf-online-cdf-online
s-cdf-pkmps
CDF srvr (WH)
s-cdf-pkmps-3
s-cdf-pkmps-2
r-cdf-pkmps
s-cdf-bld327-1
s-cdf-cdf3cr-offline
s-cdf-pkmps-159
cdffarm1
CDF: RUN-II and legacy FDDIs
D. Wohlt 9/24/01

Fermilab Core Network

- Core routers & switches in Feynman C.C. (FCC) & Wilson Hall:
  - Based on Catalyst 6509s with routing modules
  - Various work group LANs attach to core devices
- Border router delineates on-site from off-site:
  - Two OC3 (155Mb/s) links
- Gigabit links connect the core network components

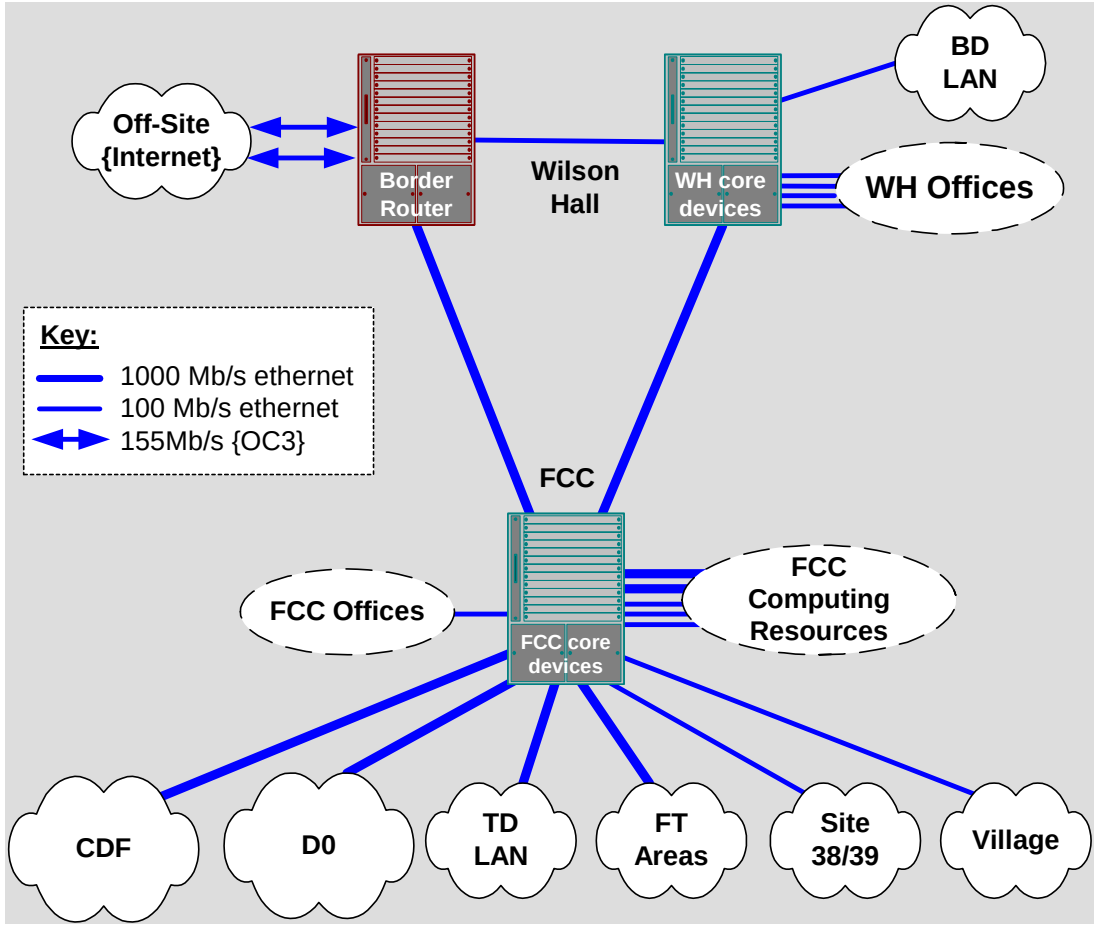

Off-Site Network Connectivity

- All traffic to/from off-site passes through a border router:
  - Access control lists on border router restrict traffic, when necessary.

- Two off-site links, both OC3s (155Mb/s):
  - ESnet link is the default path; it carries all the general internet traffic
  - MREN link supports several specific research networks, including CERN
  - The ESnet & MREN links provide redundancy for each other; if one link fails, traffic will get rerouted across the other link

- DMZ LAN recently upgraded to gigabit ethernet:
  - off-site link upgrade(s) to OC12 (622Mb/s) expected in next year or so…

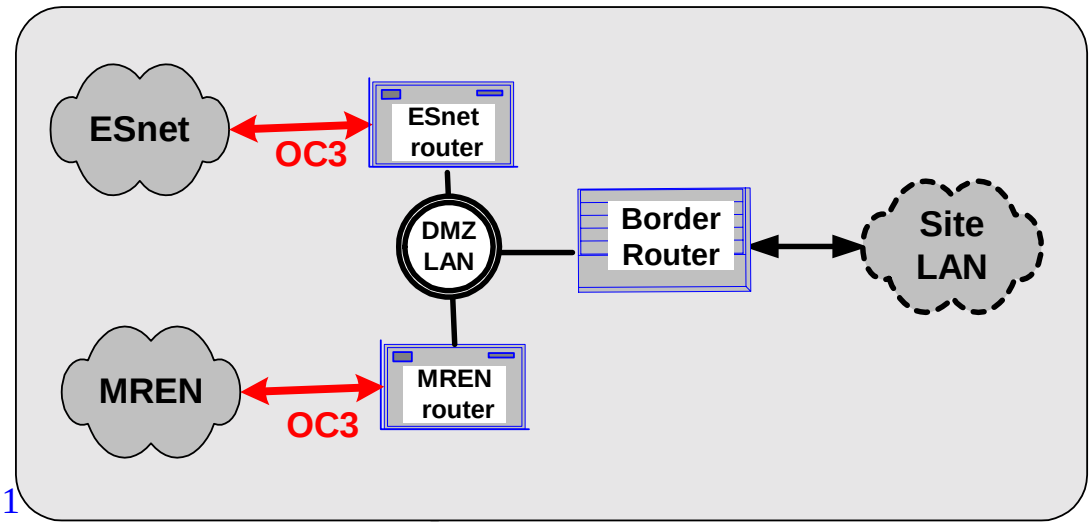

Network Expansion

- **Many possibilities:**
  - Chassis expansion (6509->6513)
  - Multiple Gigabit trunking
  - 10 Gigabit links
- **Fiber between FCC and B0**
  - 16 pairs multimode
  - 12 pairs single-mode (needed for Gigabit fiber)
    - 4 pairs used
  - Could blow fiber into tubes
  - Lots of fiber capacity

Summary

- **CDF has an impressive base of central computing systems.**
- **Large capabilities exist in:**
  - Farms
  - Networking
  - Robotics
  - Disk systems
  - Central account serving
  - CPU