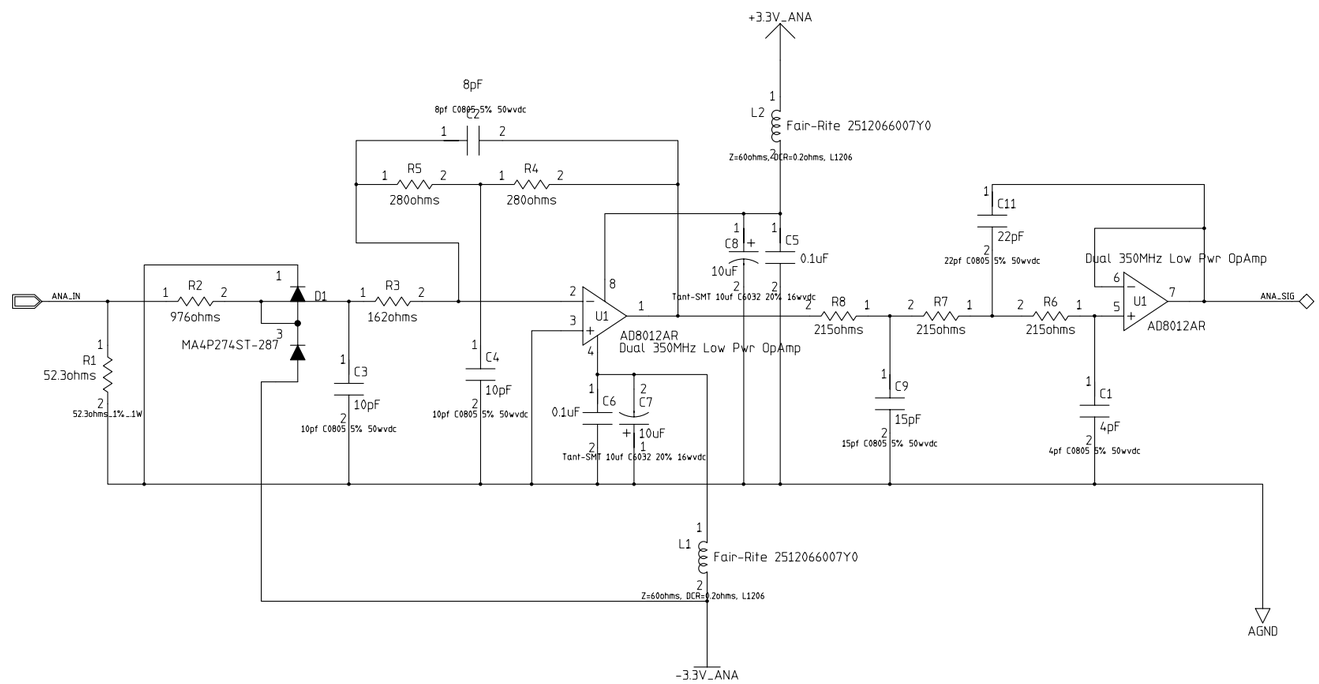

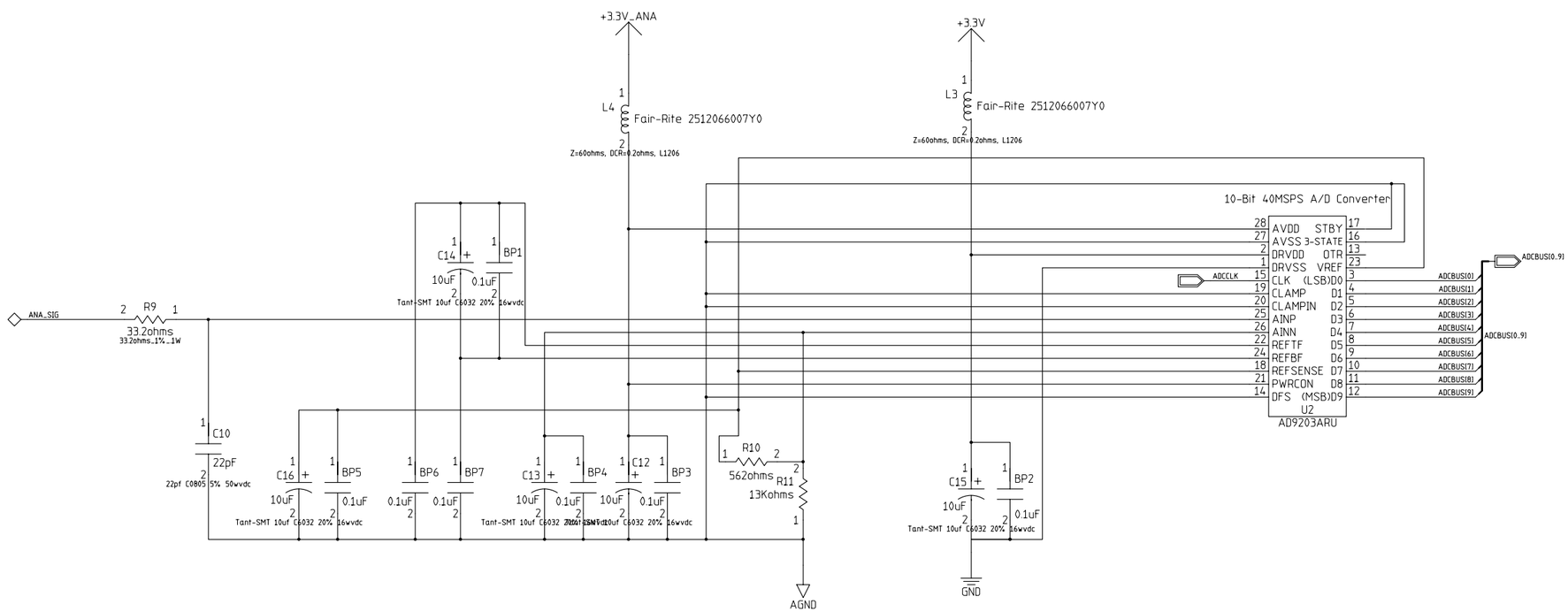

MODIFIED 6/29/2004 4:27:28 PM		Hierarchical_Page 01 Hierarchical_Page Total	
EED Department	ORIGINATOR	originator	DATE date
	DRAWN	drawn	DATE date
	CHECKED	checked	DATE date
	APPROVED	approved	DATE date

Fermi National Accelerator Laboratory
United States Department of Energy

C:\Active_Mentor_Jobs\IPM__Simulation\IPM_Passive_Filter.prj

SIZE	DRAWING NUMBER		REV
D	drawing number	Schematic Page 01 of 01	A

H=BND; V=4LA