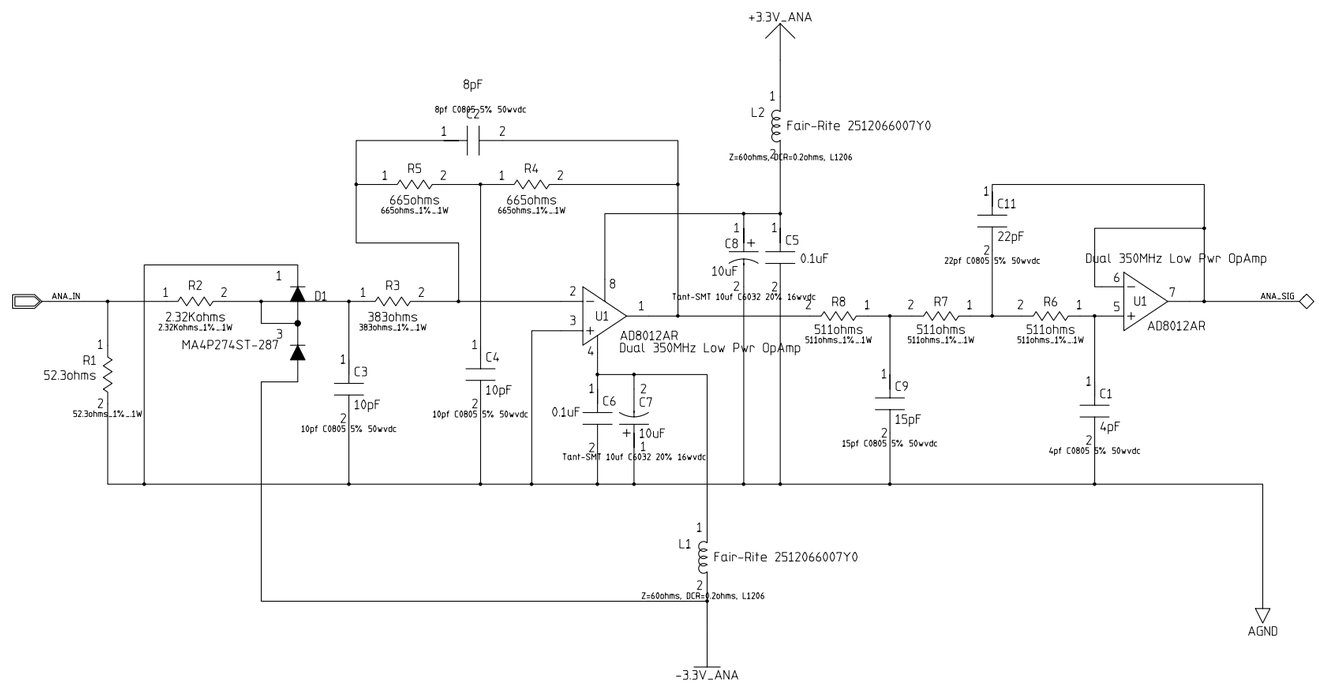

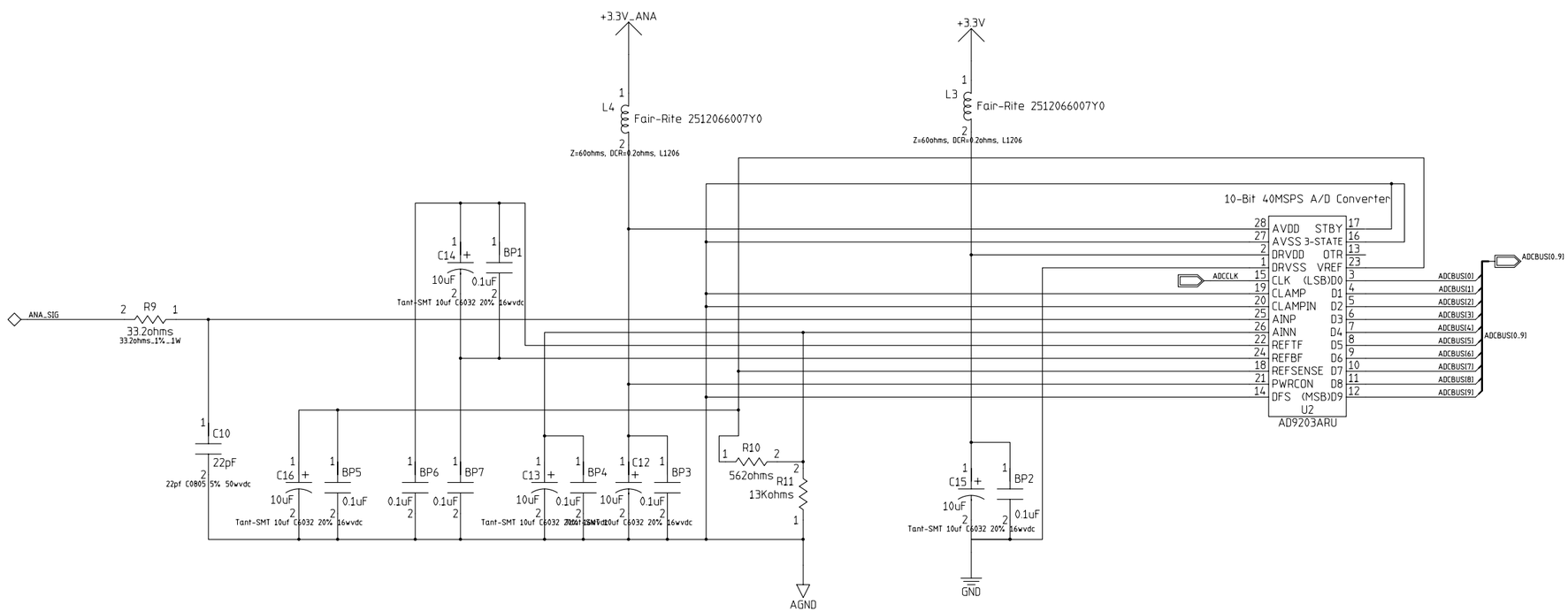

MODFIED 3/18/2003 5:22:12 PM		Hierarchical_Page 01	Page Number Page Total
EED Department	ORIGINATOR	Kwame Bowie	DATE date
	DRAWN	Kwame Bowie	DATE date
	CHECKED	Kwame Bowie	DATE date
	APPROVED	Kwame Bowie	DATE 12/01/03

Fermi National Accelerator Laboratory
United States Department of Energy

C:\Documents and Settings\bowie\Desktop\FEv3_3d_prototype_qfp\FEv3_3d.prj

SIZE	DRAWING NUMBER		REV
D	ED173495	Schematic Page 01 of 01	A

H=BND; V=4LA