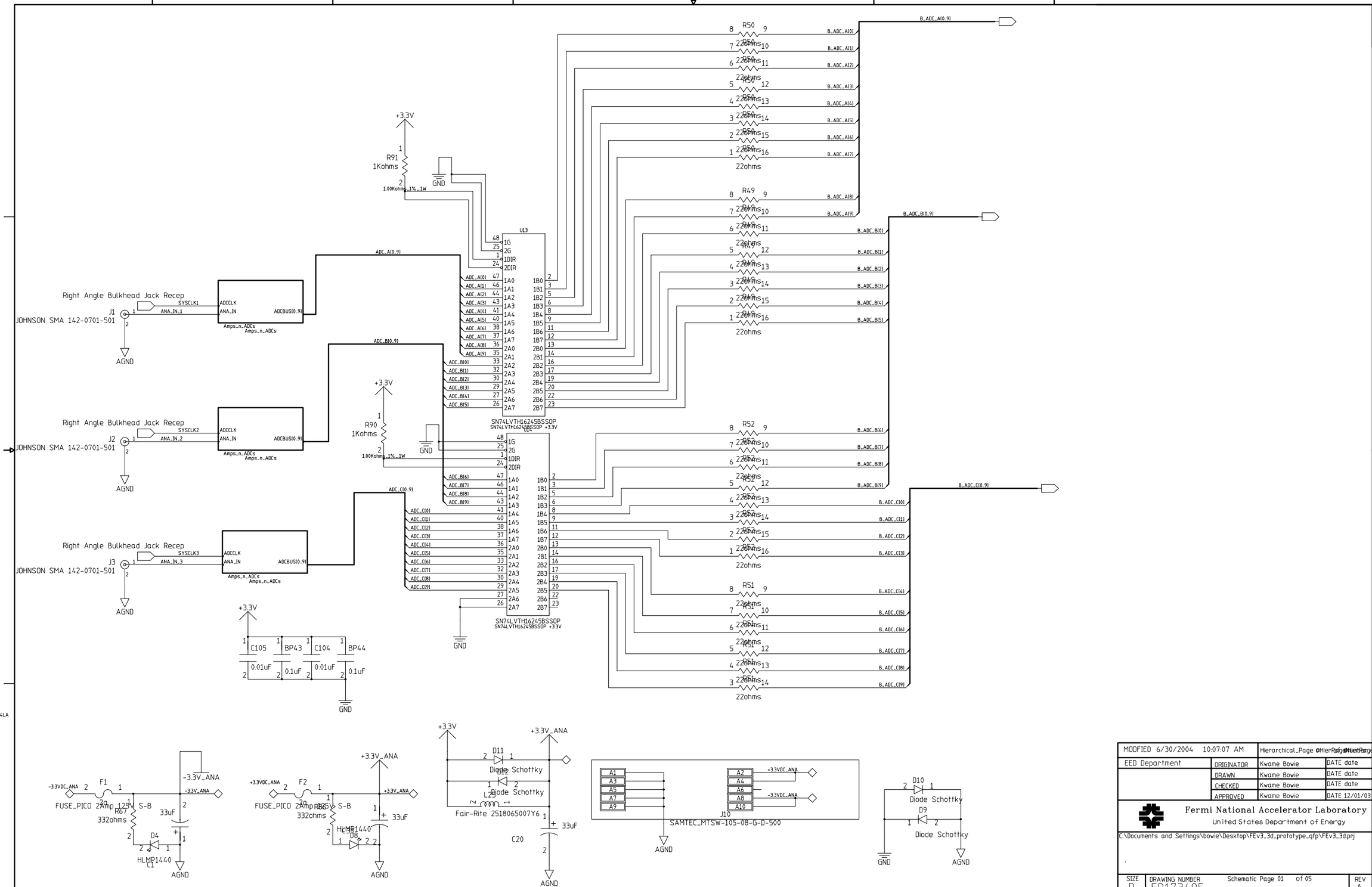

H=8ND; V=4LA

MODIFIED 6/30/2004 10:07:07 AM	Hierarchical_Page 01 of 05	Page Number	Total Pages
EED Department	ORIGINATOR	Kwame Bowie	DATE date
	DRAWN	Kwame Bowie	DATE date
	CHECKED	Kwame Bowie	DATE date
	APPROVED	Kwame Bowie	DATE 12/01/03

Fermi National Accelerator Laboratory
United States Department of Energy

C:\Documents and Settings\bowie\Desktop\FEv3_3d_prototype_qfp\FEv3_3d.prj

SIZE	DRAWING NUMBER		REV
D	ED173495	Schematic Page 01 of 05	A

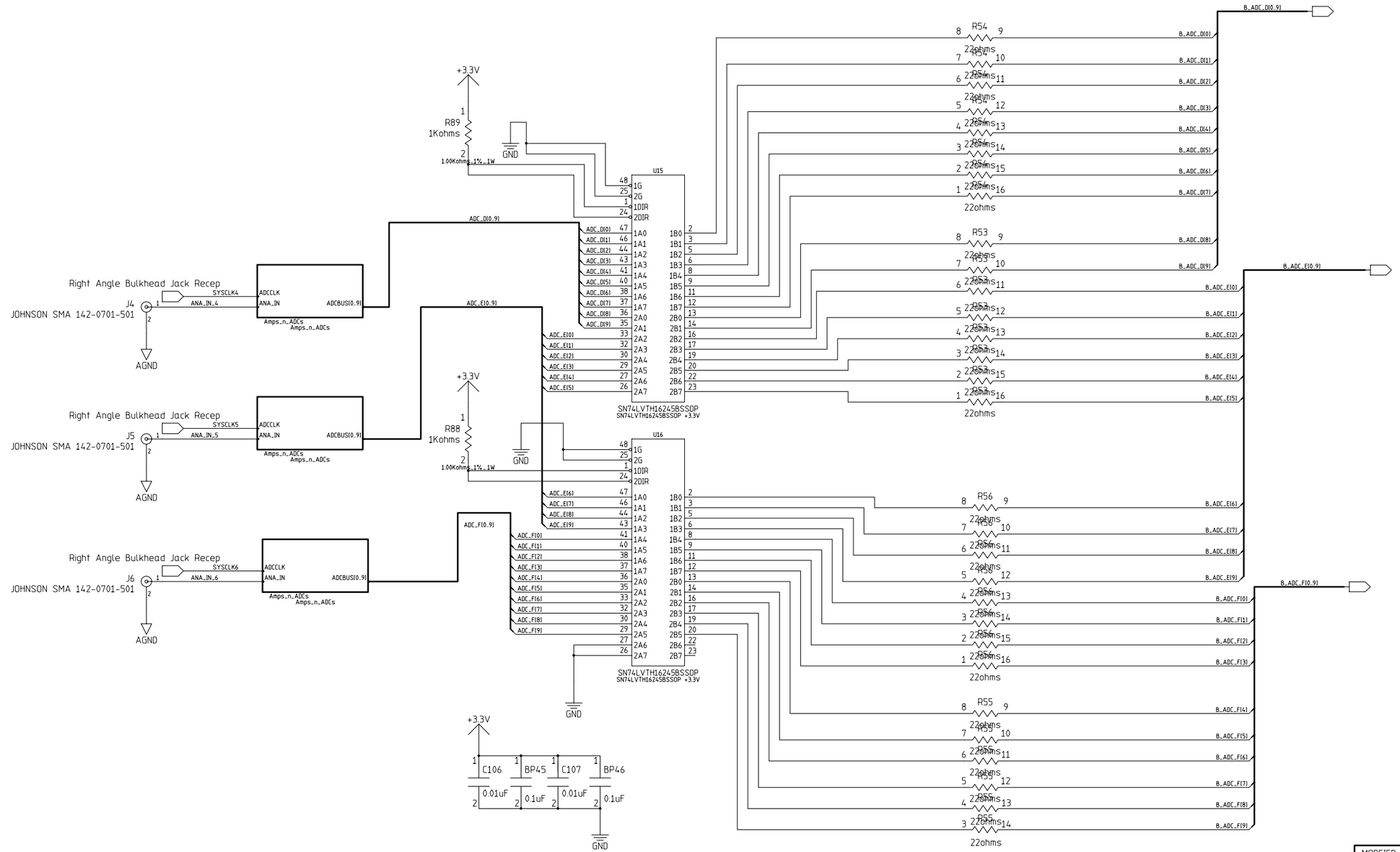

MODFIED 10:07:07 AM 6/30/2004	Hierarchical_Page 0		Page Number Page Total
EED Department	ORIGINATOR	Kwame Bowie	date date
	DRAWN	Kwame Bowie	date date
	CHECKED	Kwame Bowie	date date
	APPROVED	Kwame Bowie	date 12/01/03

Fermi National Accelerator Laboratory
United States Department of Energy

C:\Documents and Settings\bowie\Desktop\FEv3_3d_prototype_qfp\FEv3_3d.prj

SIZE	DRAWING NUMBER		REV
D	ED173495	Schematic Page 02 of 05	A

H:8ND; V:4LA

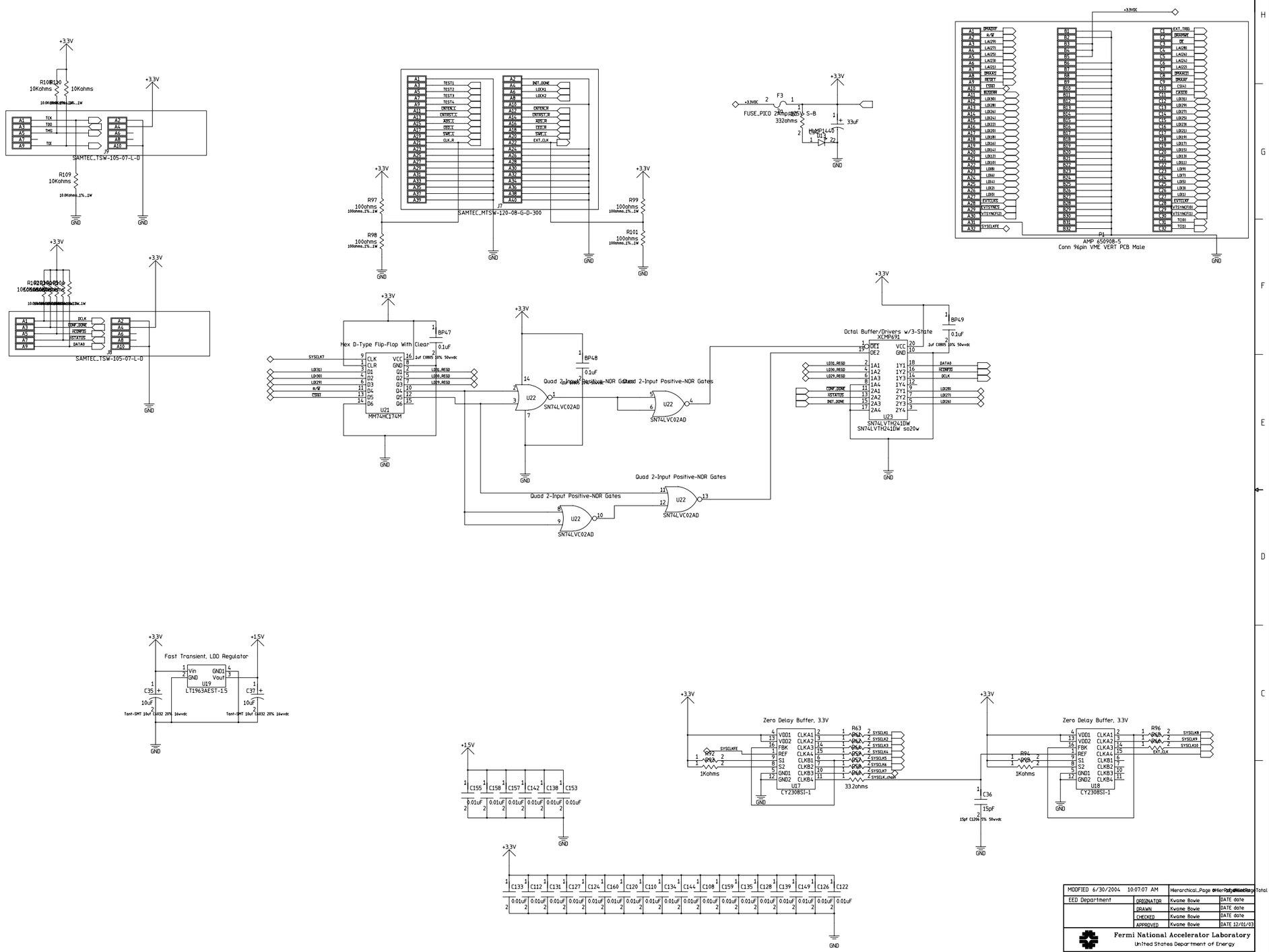

MODIFIED 6/30/2004 10:07:07 AM		Hierarchical_Page 03 of 05	Total
EED Department	DESIGNATOR	Kwame Bowie	DATE date
	DRAWN	Kwame Bowie	DATE date
	CHECKED	Kwame Bowie	DATE date
	APPROVED	Kwame Bowie	DATE 12/01/03

Fermi National Accelerator Laboratory
United States Department of Energy

C:\Documents and Settings\bowie\Desktop\FEv3_3d_prototype_qfp\FEv3_3d.prj

SIZE	DRAWING NUMBER	Schematic Page 03 of 05	REV
E	ED173495		A

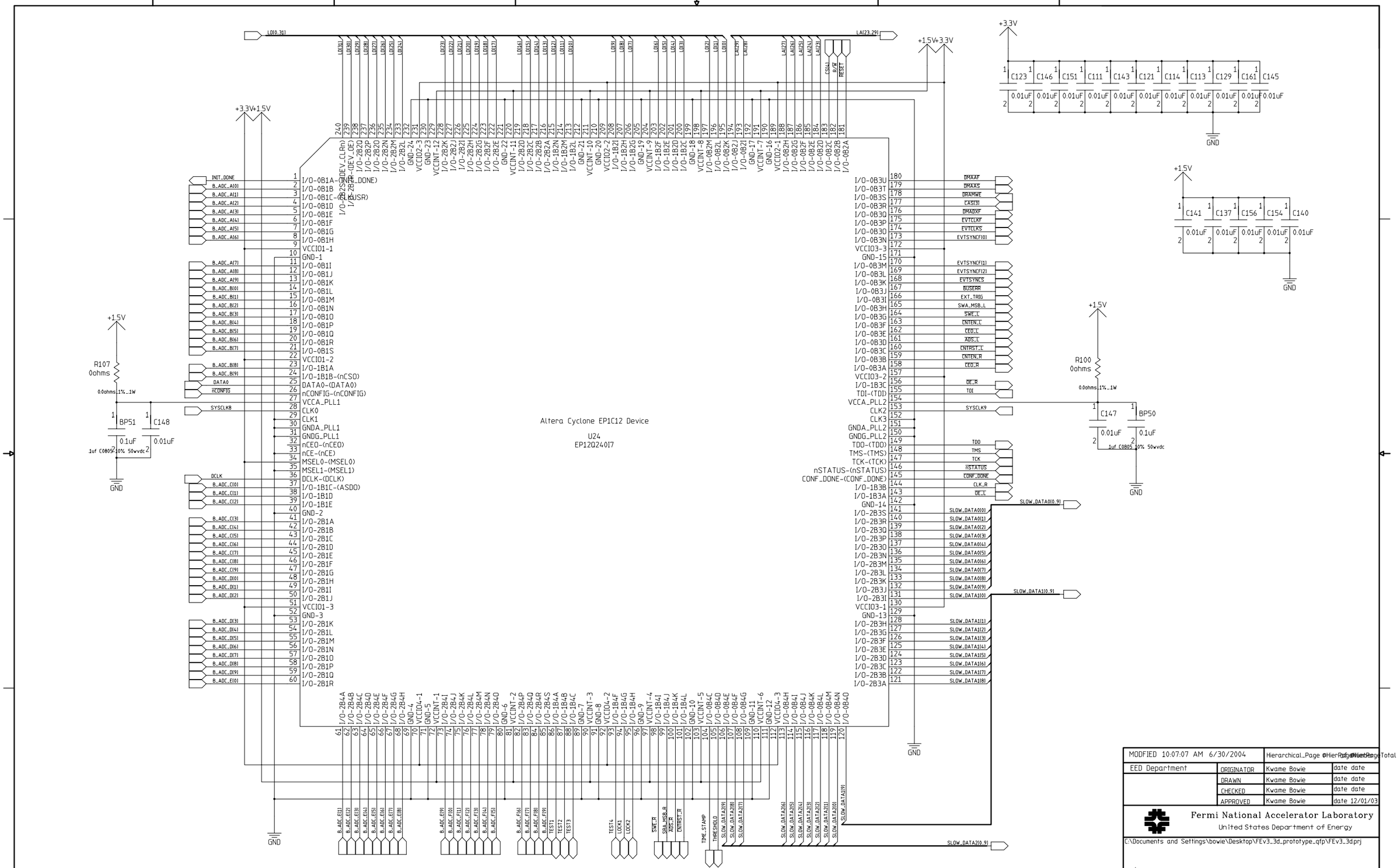

MODIFIED 10:07:07 AM 6/30/2004		Hierarchical_Page 04 of 05 Total	
EED Department	ORIGINATOR	Kwame Bowie	date date
	DRAWN	Kwame Bowie	date date
	CHECKED	Kwame Bowie	date date
	APPROVED	Kwame Bowie	date 12/01/03

Fermi National Accelerator Laboratory
United States Department of Energy

C:\Documents and Settings\bowie\Desktop\FEv3_3d_prototype_qfp\FEv3_3dprj

SIZE	DRAWING NUMBER		REV
D	ED173495	Schematic Page 04 of 05	A

H=8ND; V=4LA

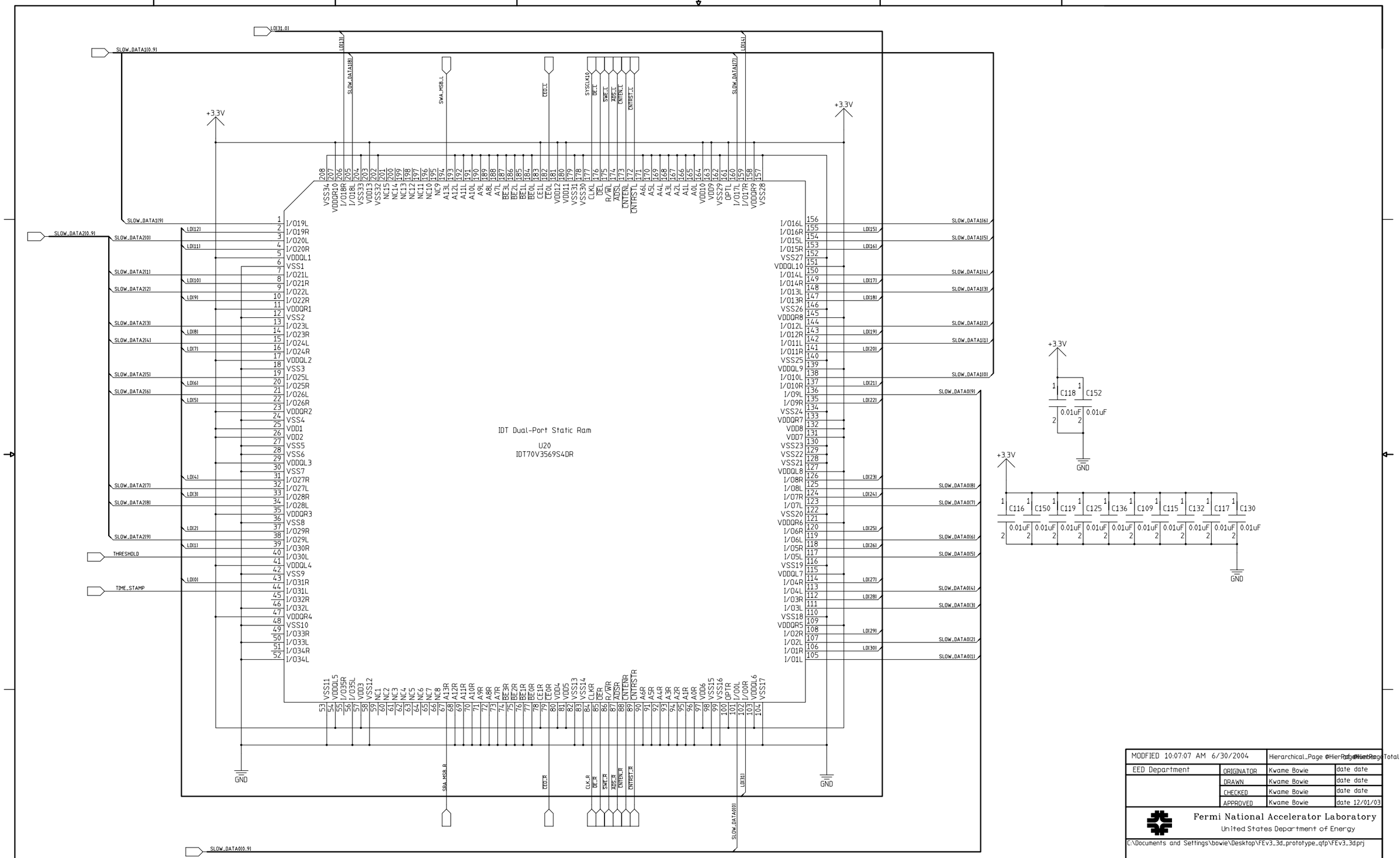

MODFIED 10:07:07 AM 6/30/2004		Hierarchical_Page 0 of Hierarchical_Page Total	
EED Department	ORIGINATOR	Kwame Bowie	date date
	DRAWN	Kwame Bowie	date date
	CHECKED	Kwame Bowie	date date
	APPROVED	Kwame Bowie	date 12/01/03

Fermi National Accelerator Laboratory
United States Department of Energy

C:\Documents and Settings\bowie\Desktop\FEv3_3d_prototype_qfp\FEv3_3d.prj

SIZE	DRAWING NUMBER		REV
D	ED173495	Schematic Page 05 of 05	A

H=8ND; V=4LA