DWG. NO.	SH.	REV

REVISIONS

REV	DESCRIPTION	DATE	APPROVED

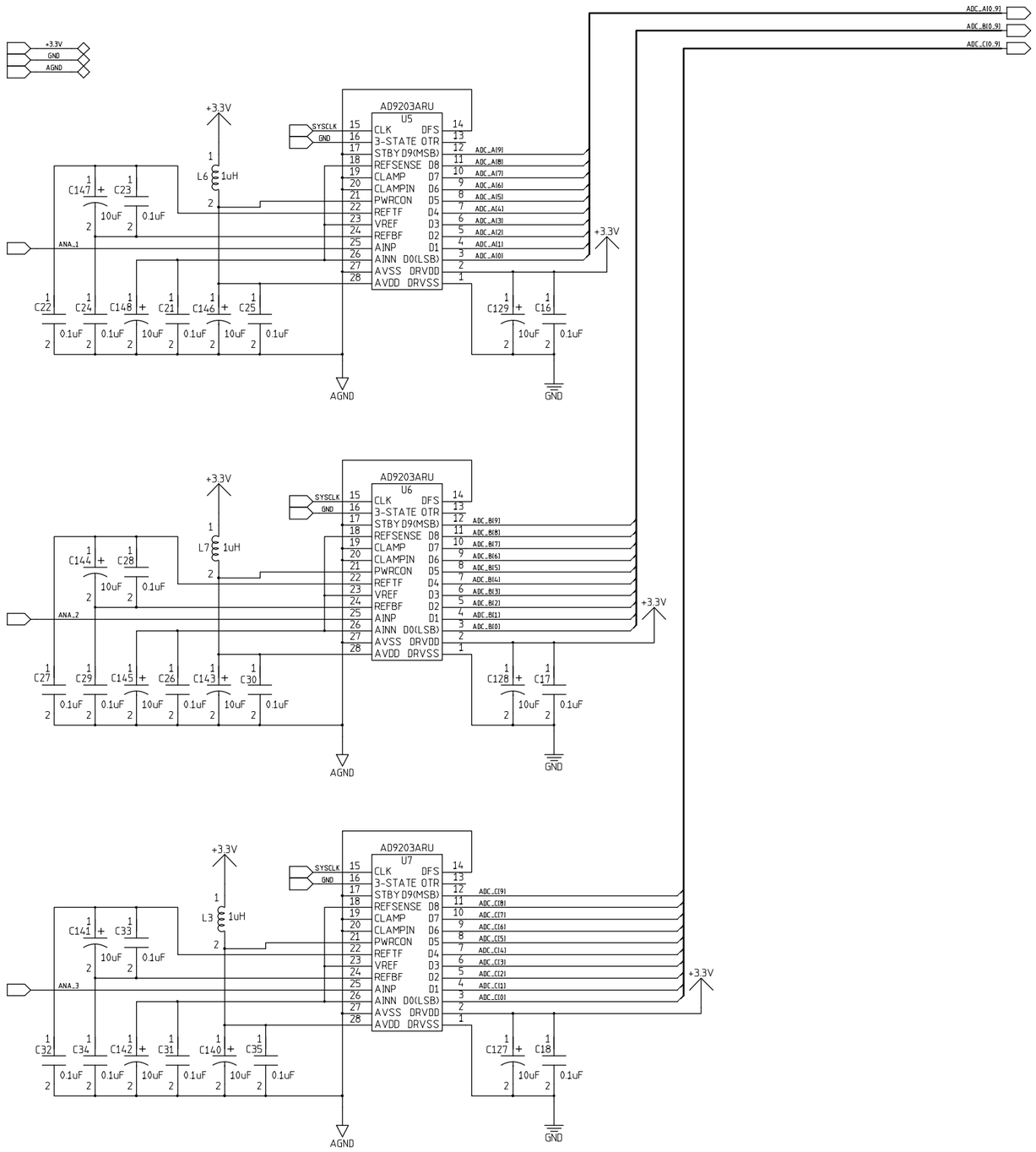

CONTRACT NO.		
APPROVALS	DATE	
DRAWN		High Gain Channel ADCs and FIFOs
CHECKED		
ISSUED		SIZE D / FSCM NO. / DWG. NO. / REV
		SCALE / SHEET

H=BND; V=4LA

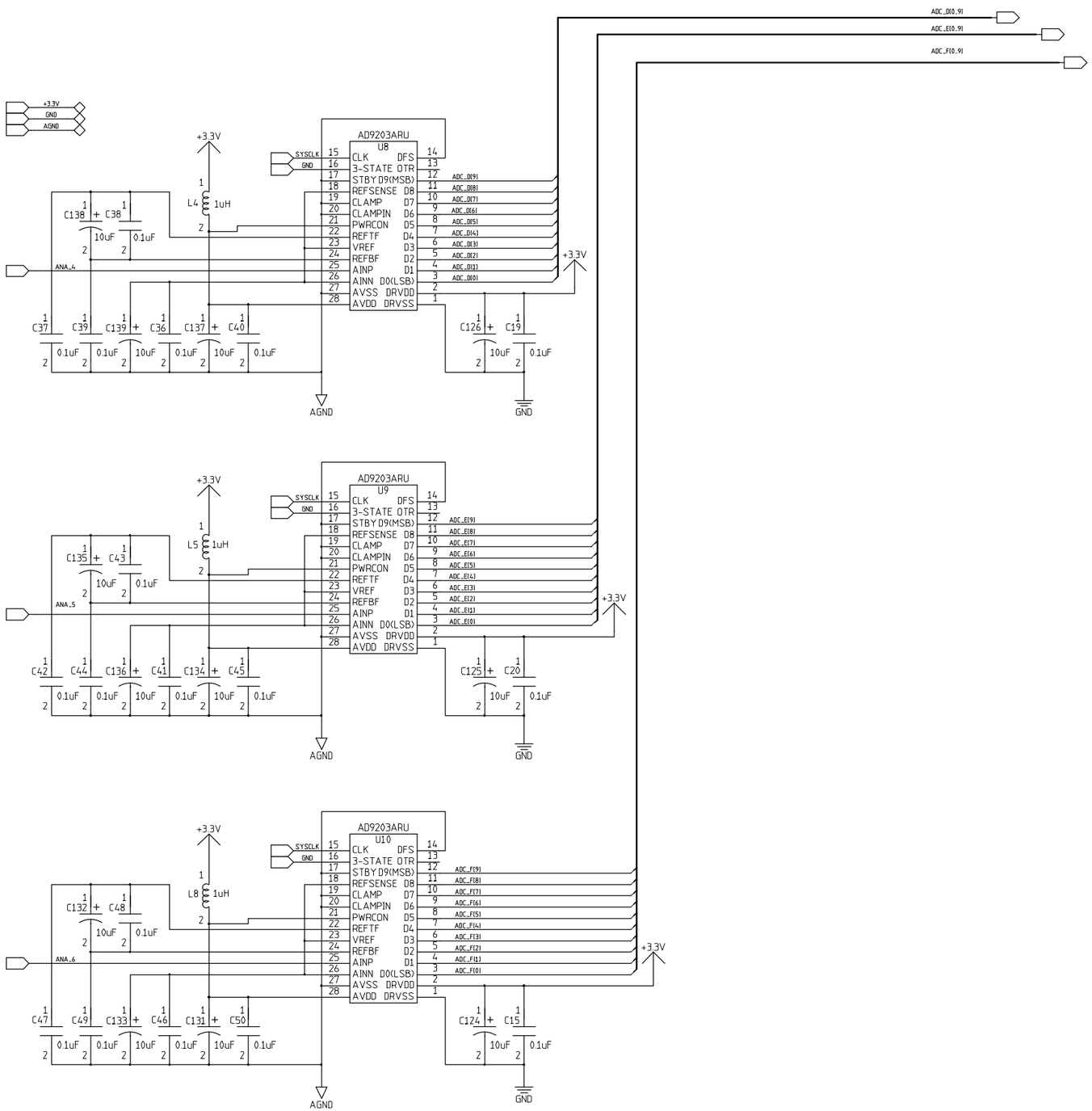

DWG. NO.	SH.	REV

REVISIONS

REV	DESCRIPTION	DATE	APPROVED

CONTRACT NO.	
APPROVALS	DATE
DRAWN	
CHECKED	
ISSUED	

Low Gain Channel
ADCs and FIFOs

SIZE	FSCM NO.	DWG. NO.	REV
D			
SCALE		SHEET	

H=BND; V=4LA

DWG. NO.	SH.	REV

REVISIONS

REV	DESCRIPTION	DATE	APPROVED

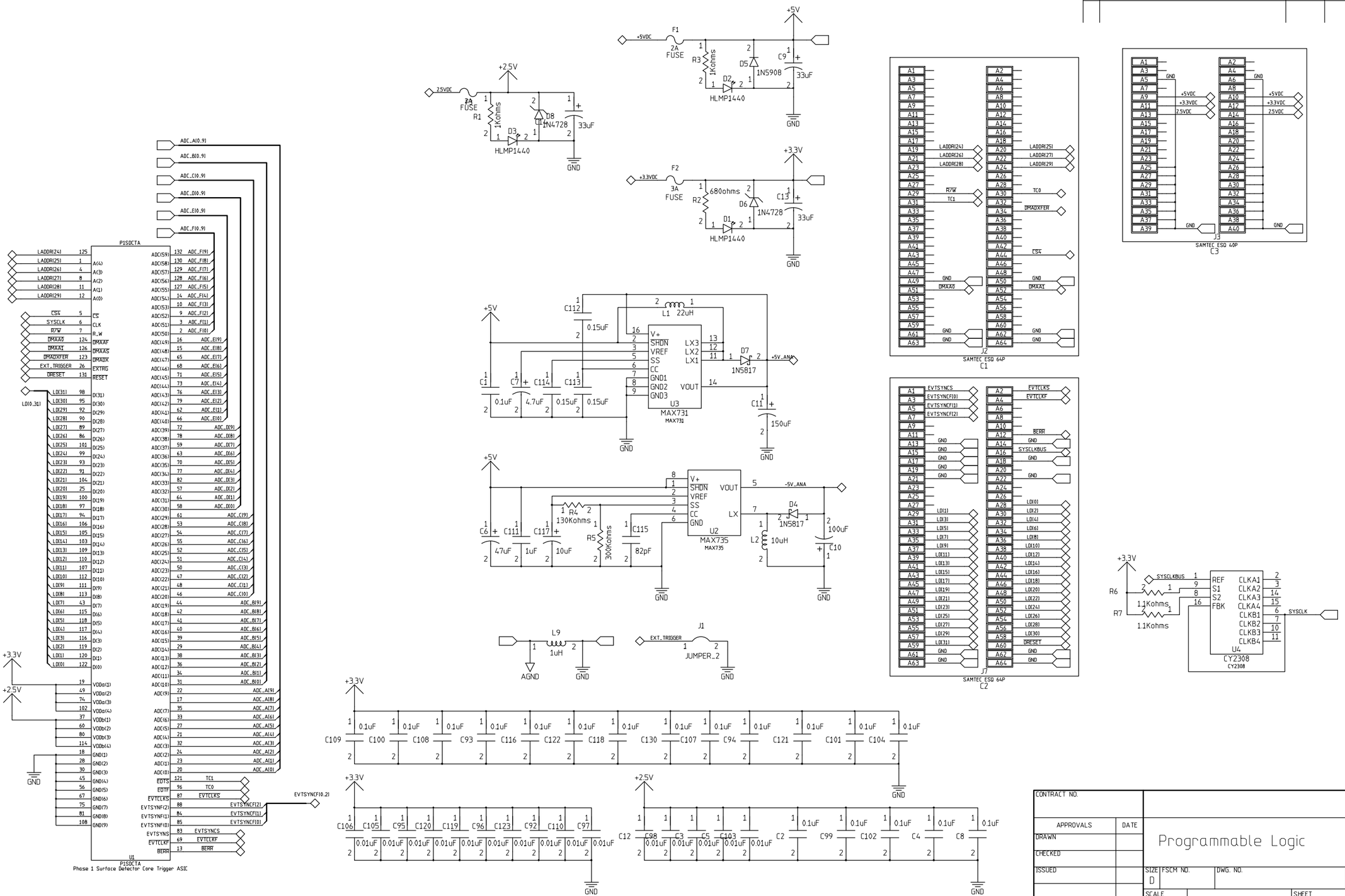

CONTRACT NO.		
APPROVALS	DATE	
DRAWN		Programmable Logic
CHECKED		
ISSUED		SIZE D / FSCM NO. / DWG. NO. / REV
		SCALE / SHEET

H=8ND; V=4LA

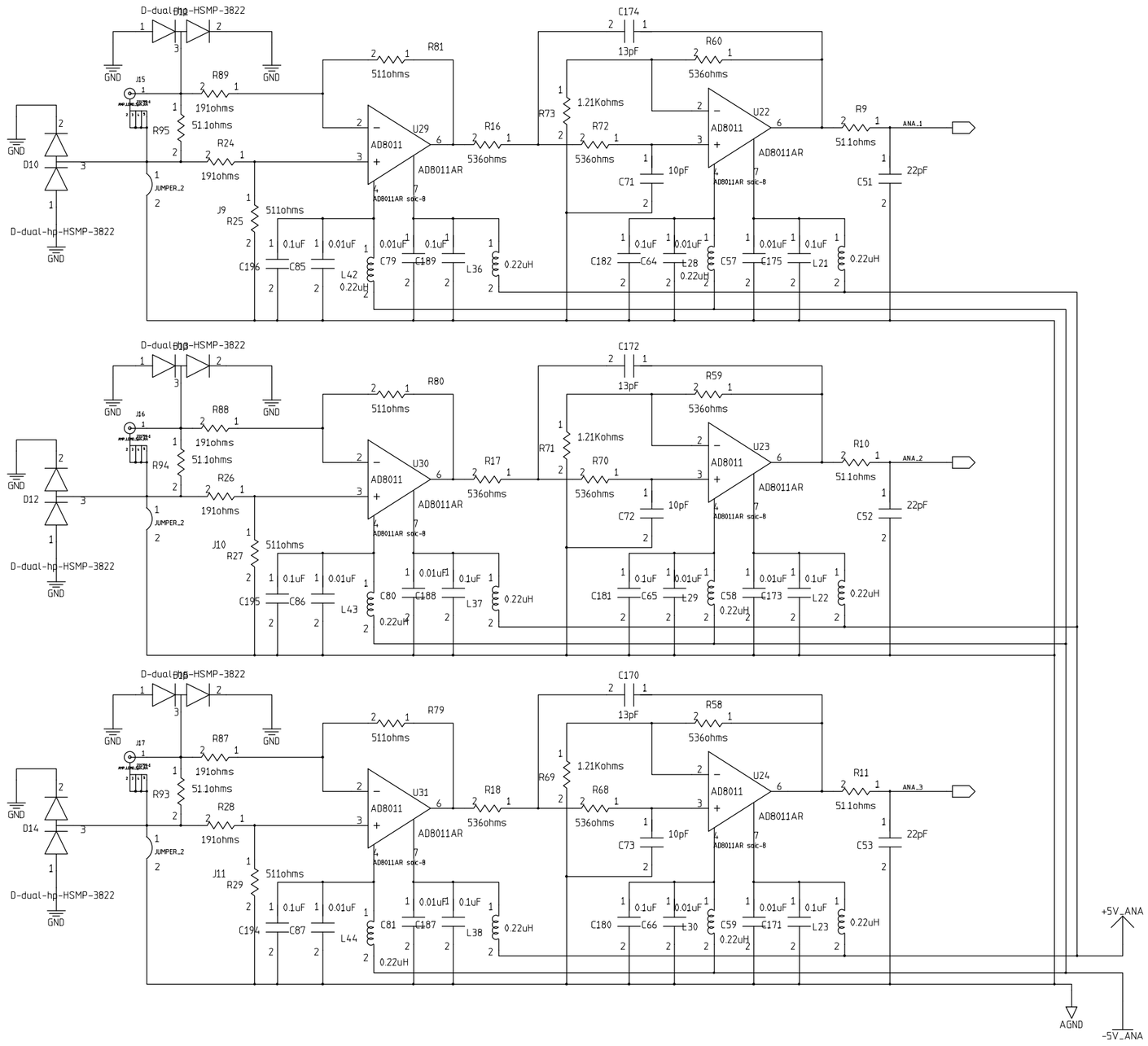

DWG. NO.	SH.	REV

REVISIONS

REV	DESCRIPTION	DATE	APPROVED

CONTRACT NO.	
APPROVALS	DATE
DRAWN Mark Koziovsky	
CHECKED	
ISSUED	

ANALOG HIGH GAIN AMPLIFIER

SIZE	FSCM NO.	DWG. NO.	REV
D			
SCALE		SHEET	

H=8ND; V=4LA

DWG. NO.	SH.	REV

REVISIONS

REV	DESCRIPTION	DATE	APPROVED

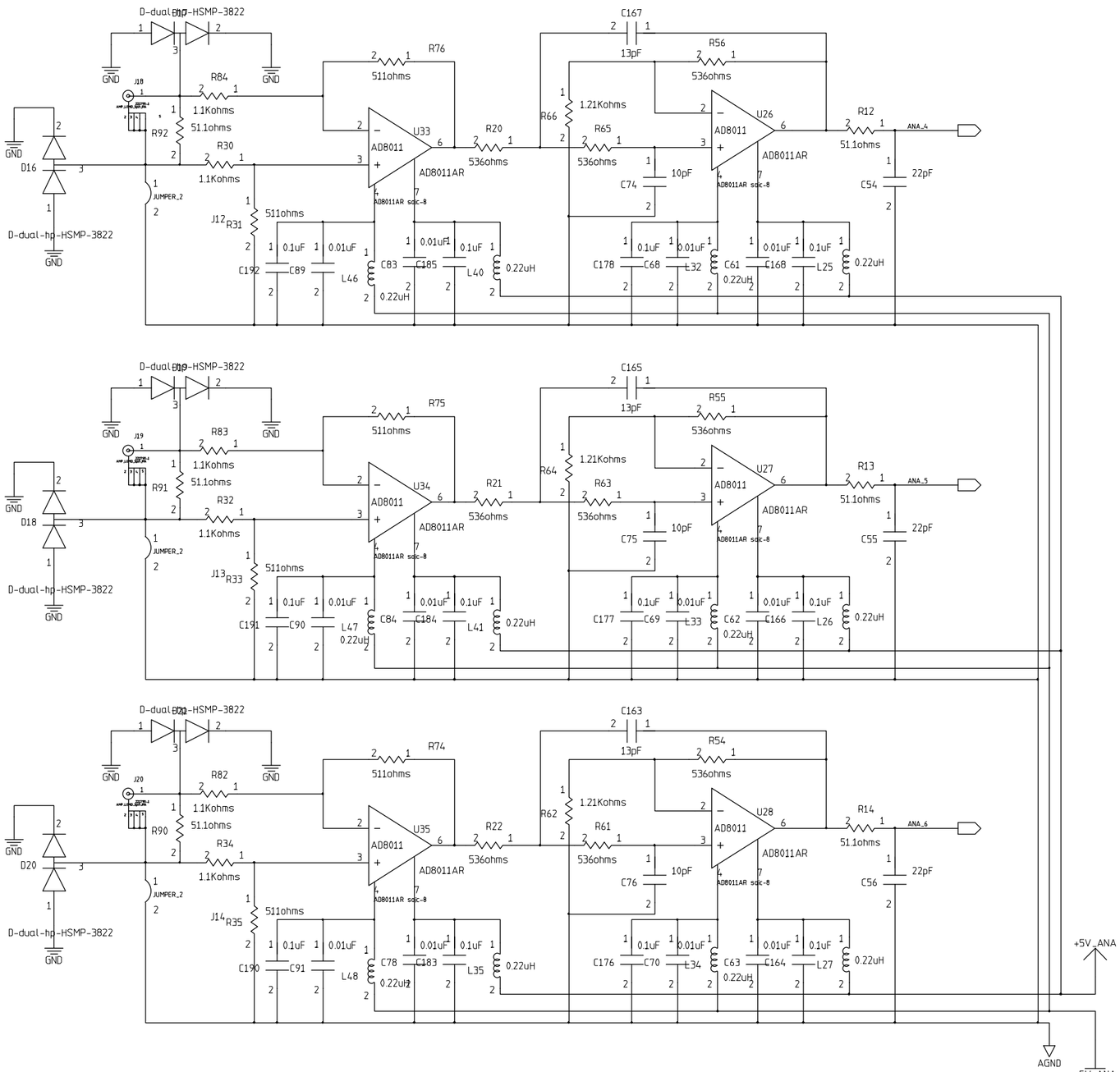

CONTRACT NO.		
APPROVALS	DATE	ANALOG LOW GAIN AMPLIFIER
DRAWN Mark Kozlovsky		
CHECKED		
ISSUED		SIZE D · FSCM NO. · DWG. NO. · REV
		SCALE · SHEET

H:8NQ; V:4LA

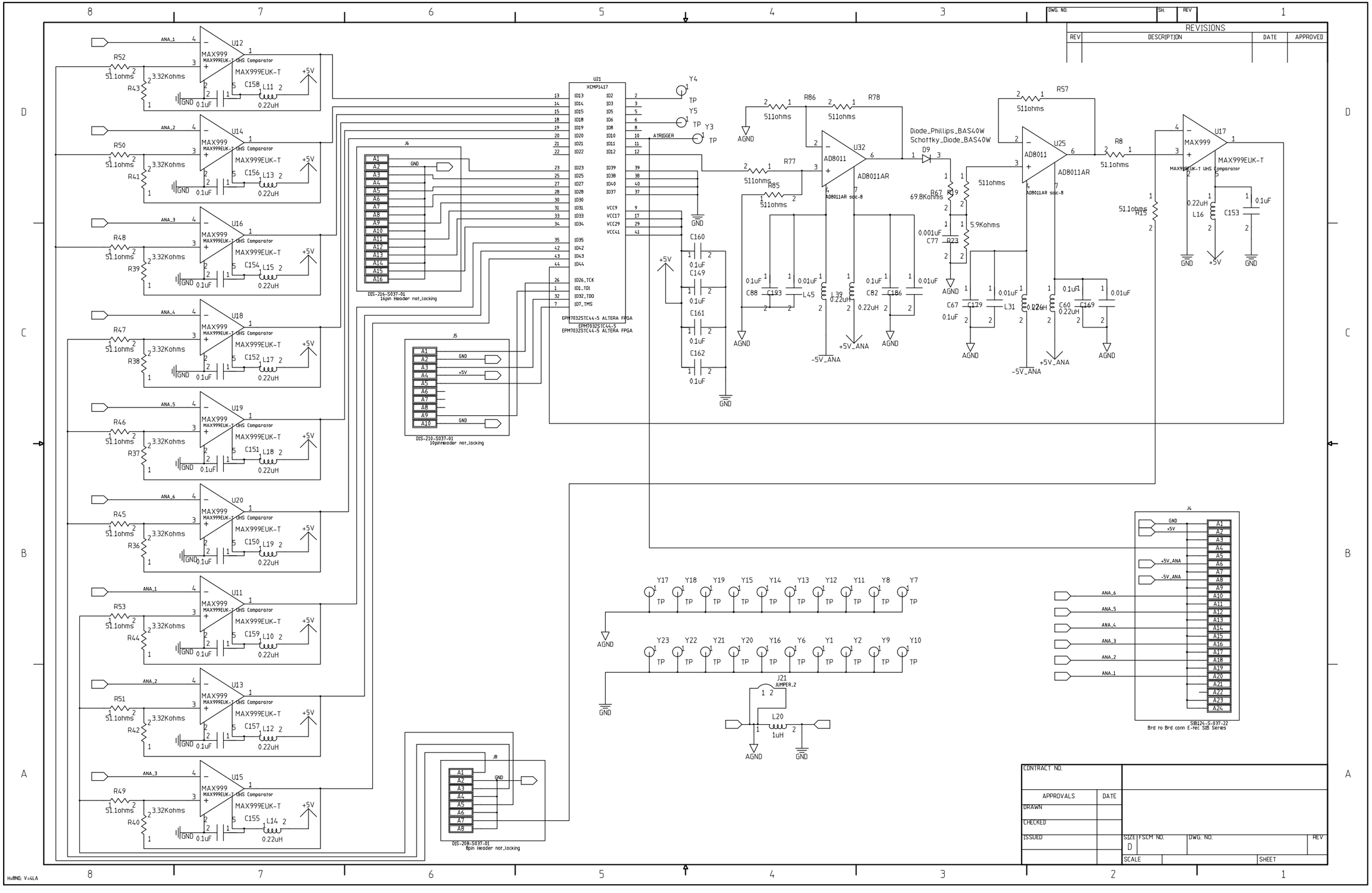

REVISIONS
REV
DESCRIPTION
DATE
APPROVED
DWG. NO.
SH.
REV
U12
U14
U16
U18
U19
U20
U11
U13
U15
MAX999
MAX999EUK-T UHS Comparator
U21
XCMP1417
EPM7032STC44-5 ALTERA FPGA
DIS-216-S037-01
16pin Header not_locking
DIS-210-S037-01
10pinHeader not_locking
DIS-208-S037-01
8pin Header not_locking
U32
AD8011
AD8011AR
AD8011AR soc-8
U25
U17
Diode_Phillips_BAS40W
Schottky_Diode_BAS40W
J21
JUMPER_2
J4
SIB124-S-037-22
Brd to Brd conn E-tec SIB Series
CONTRACT NO.
APPROVALS
DATE
DRAWN
CHECKED
ISSUED
SIZE
D
FSCM NO.
DWG. NO.
REV
SCALE
SHEET
H=8ND; V=4LA

DWG. NO.	SH.	REV

REVISIONS

REV	DESCRIPTION	DATE	APPROVED

CONTRACT NO.	
APPROVALS	DATE
DRAWN	
CHECKED	
ISSUED	

SIZE	FSCM NO.	DWG. NO.	REV
D			
SCALE		SHEET	

H=8ND; V=4LA