DWG. NO.	SH.	REV

REVISIONS

REV	DESCRIPTION	DATE	APPROVED

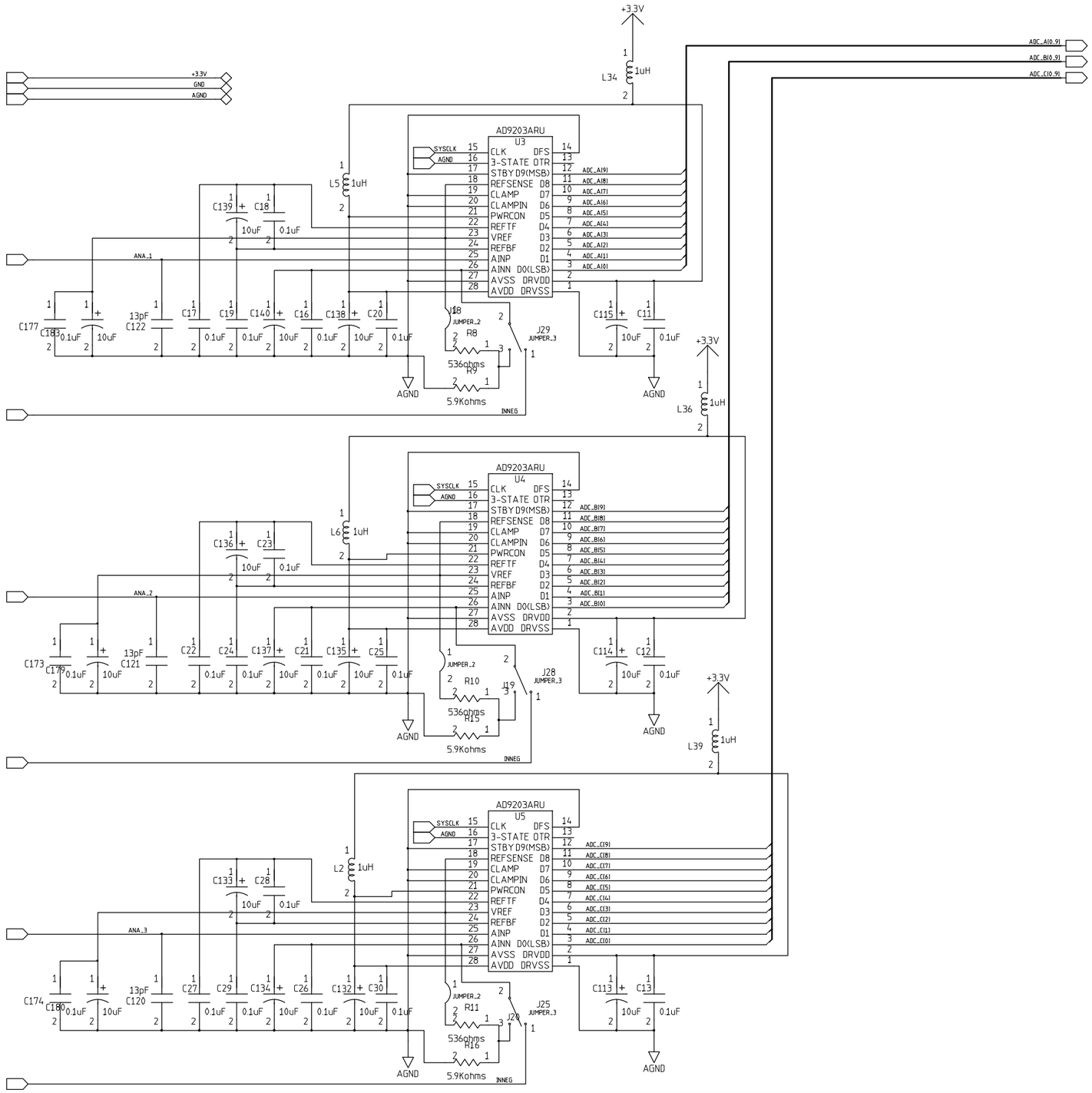

CONTRACT NO.		
APPROVALS	DATE	High Gain Channel ADCs and FIFOs
DRAWN		
CHECKED		
ISSUED		SIZE D / FSCM NO. / DWG. NO. / REV
		SCALE / SHEET

H=8ND; V=4LA

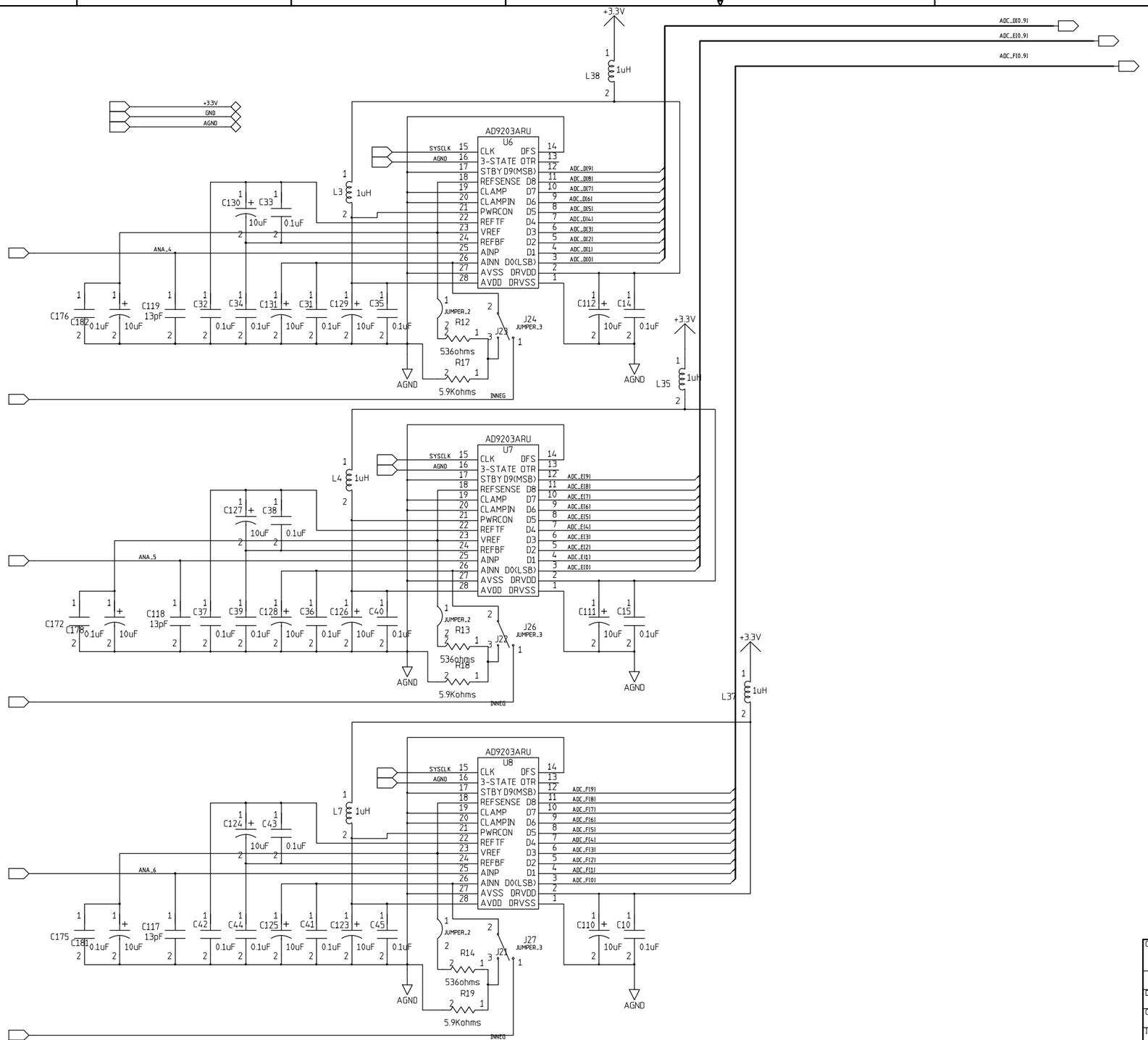

DWG. NO.	SH.	REV

REVISIONS

REV	DESCRIPTION	DATE	APPROVED

CONTRACT NO.	
APPROVALS	DATE
DRAWN	
CHECKED	
ISSUED	

Low Gain Channel
ADCs and FIFOs

SIZE	FSCM NO.	DWG. NO.	REV
D			
SCALE		SHEET	

H:BND; V:4LA

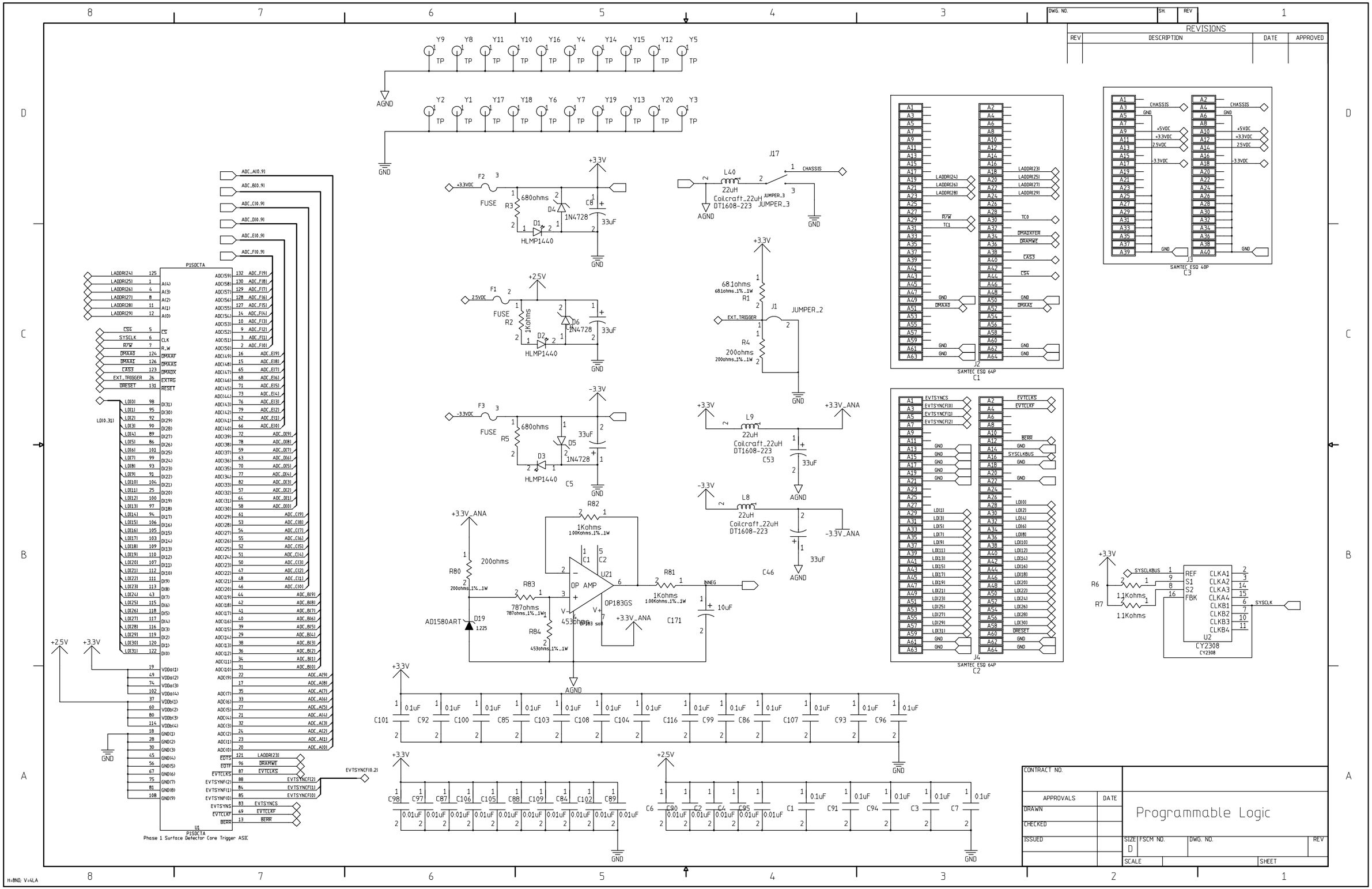
REVISIONS
REV
DESCRIPTION
DATE
APPROVED
DWG. NO.
SH.
REV
Y9 Y8 Y11 Y10 Y16 Y4 Y14 Y15 Y12 Y5
Y2 Y1 Y17 Y18 Y6 Y7 Y19 Y13 Y20 Y3
TP
AGND
GND
F2
FUSE
+3.3VDC
680ohms
R3
D4
1N4728
C8
33uF
D1
HLMP1440
+3.3V
F1
2.5VDC
+2.5V
1Kohms
R2
D6
D2
F3
-3.3VDC
-3.3V
R5
D5
D3
C5
J17
L40
22uH
Coilcraft_22uH
DT1608-223
JUMPER_3
CHASSIS
68.1ohms
R1
J1
JUMPER_2
EXT_TRIGGER
R4
200ohms
L9
C53
L8
-3.3V_ANA
+3.3V_ANA
R82
1Kohms
C1
C2
U21
OP AMP
OP183GS
R80
200ohms
R83
787ohms
R84
453ohms
R81
INNEG
C46
C171
10uF
AD1580ART
D19
1.225
J2
SAMTEC ESD 64P
C1
J4
C2
J3
SAMTEC ESD 40P
C3
R6
R7
1.1Kohms
SYSCLKBUS
SYSCLK
REF
S1
S2
FBK
CLKA1
CLKA2
CLKA3
CLKA4
CLKB1
CLKB2
CLKB3
CLKB4
U2
CY2308
P1SDCTA
U1
Phase 1 Surface Detector Core Trigger ASIC
LADDR(24)
LADDR(25)
LADDR(26)
LADDR(27)
LADDR(28)
LADDR(29)
CS4
SYSCLK
R/W
DMAAO
DMAAI
CAS3
EXT_TRIGGER
DRESET
LD(0..31)
EDTS
EDTF
EVTCLKS
EVTSYNF(2)
EVTSYNF(1)
EVTSYNF(0)
EVTSYNS
EVTCLKF
BERR
EVTSYNCF(0..2)
EVTSYNCF(2)
EVTSYNCF(1)
EVTSYNCF(0)
ADC_A(0..9)
ADC_B(0..9)
ADC_C(0..9)
ADC_D(0..9)
ADC_E(0..9)
ADC_F(0..9)
VDDa(1)
VDDa(2)
VDDa(3)
VDDa(4)
VDDb(1)
VDDb(2)
VDDb(3)
VDDb(4)
GND(1)
GND(2)
GND(3)
GND(4)
GND(5)
GND(6)
GND(7)
GND(8)
GND(9)
+2.5V
+3.3V
C101
C92
C100
C85
C103
C108
C104
C116
C99
C86
C107
C93
C96
0.1uF
C98
C97
C87
C106
C105
C88
C109
C84
C102
C89
0.01uF
C6
C90
C2
C4
C95
C1
C91
C94
C3
C7
CONTRACT NO.
APPROVALS
DATE
DRAWN
CHECKED
ISSUED
Programmable Logic
SIZE
D
FSCM NO.
DWG. NO.
REV
SCALE
SHEET
H=BND; V=4LA

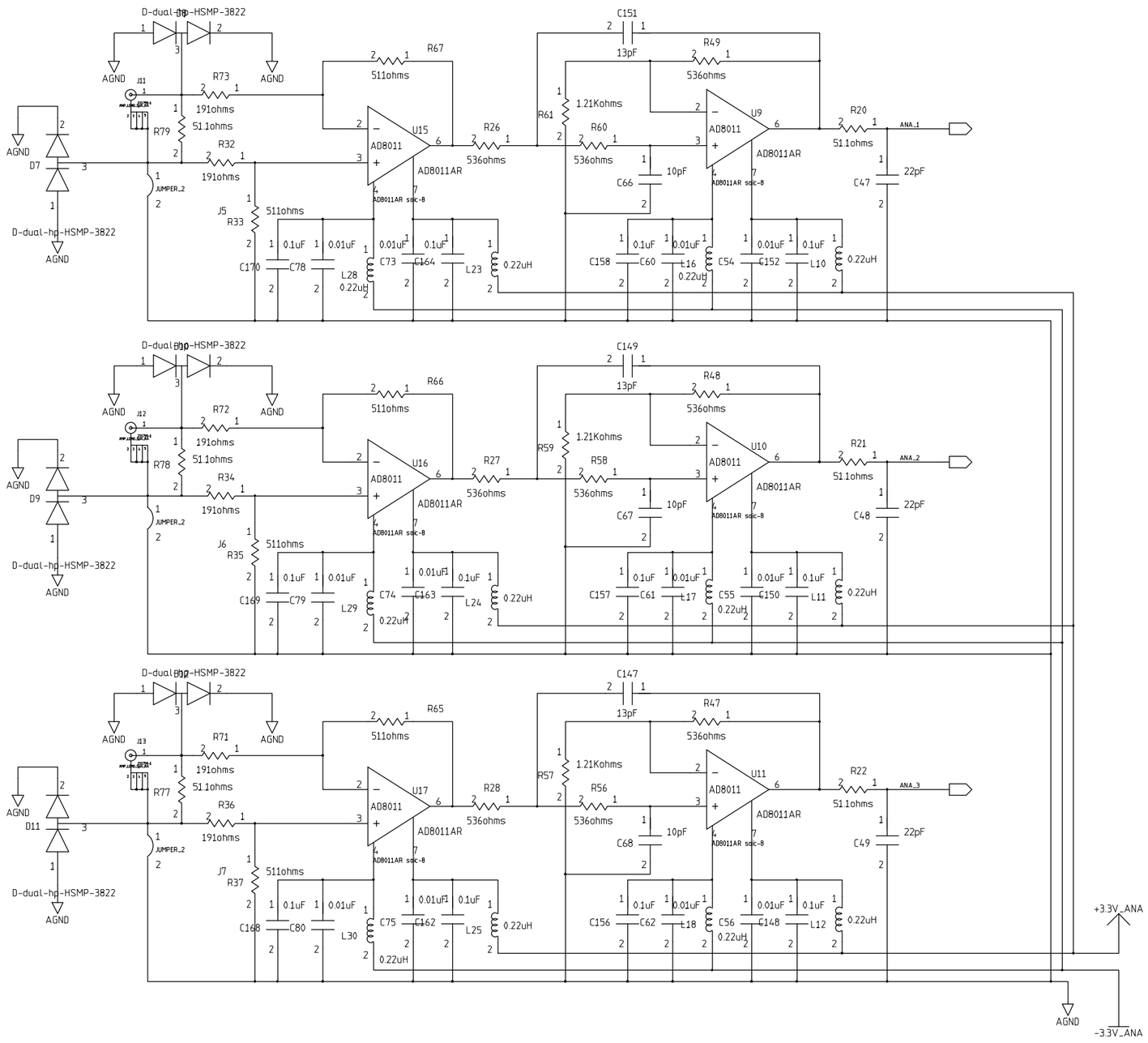

DWG. NO.	SH.	REV

REVISIONS

REV	DESCRIPTION	DATE	APPROVED

CONTRACT NO.	
APPROVALS	DATE
DRAWN Mark Koziovsky	
CHECKED	
ISSUED	

ANALOG HIGH GAIN AMPLIFIER

SIZE	FSCM NO.	DWG. NO.	REV
D			
SCALE		SHEET	

H=8ND V=4LA

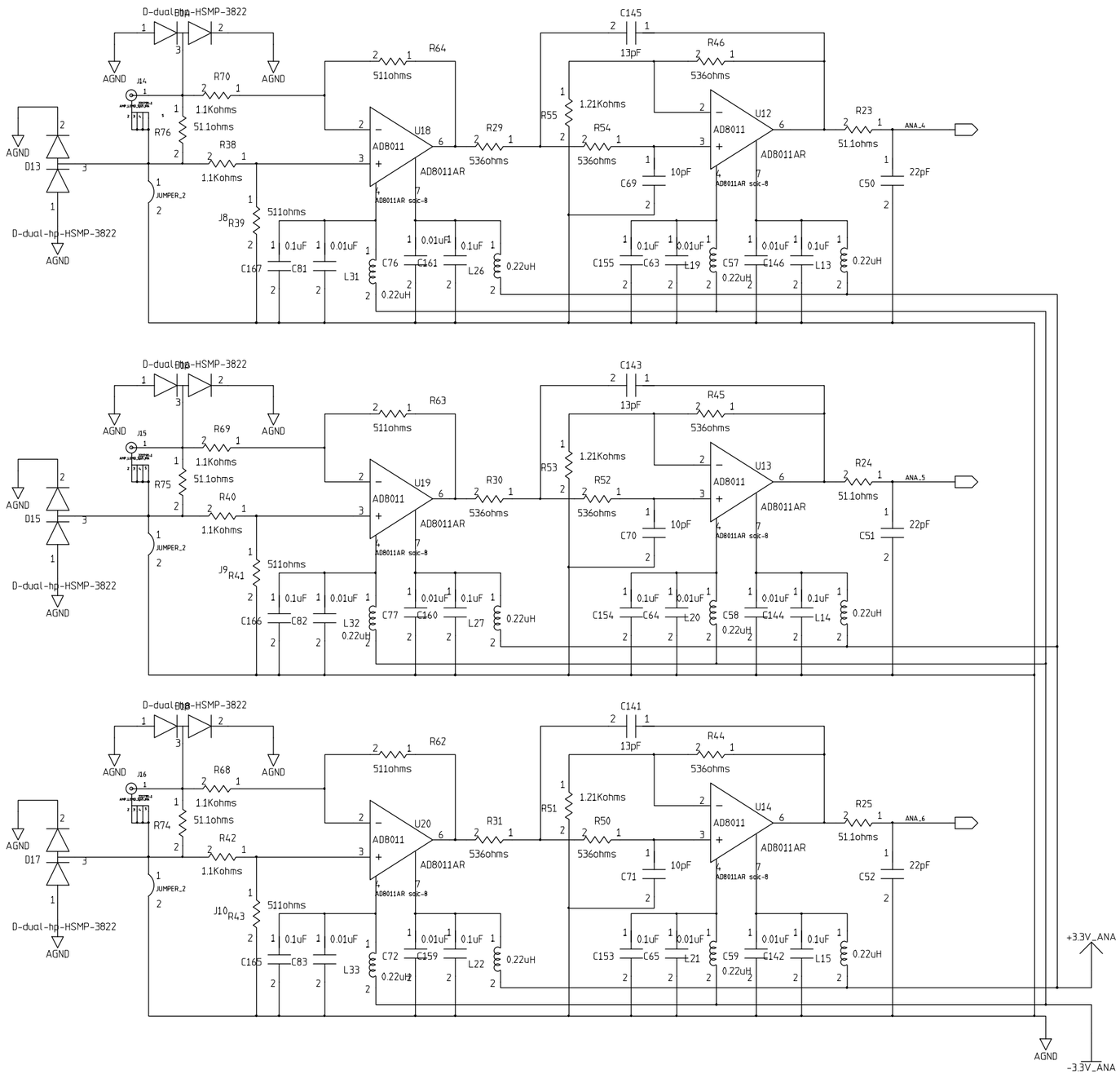

DWG. NO.	SH.	REV

REVISIONS

REV	DESCRIPTION	DATE	APPROVED

CONTRACT NO.

APPROVALS	DATE
DRAWN Mark Kozlovsky	
CHECKED	
ISSUED	

ANALOG LOW GAIN AMPLIFIER

SIZE	FSCM NO.	DWG. NO.	REV
D			

SCALE | SHEET

H:8ND; V:4LA