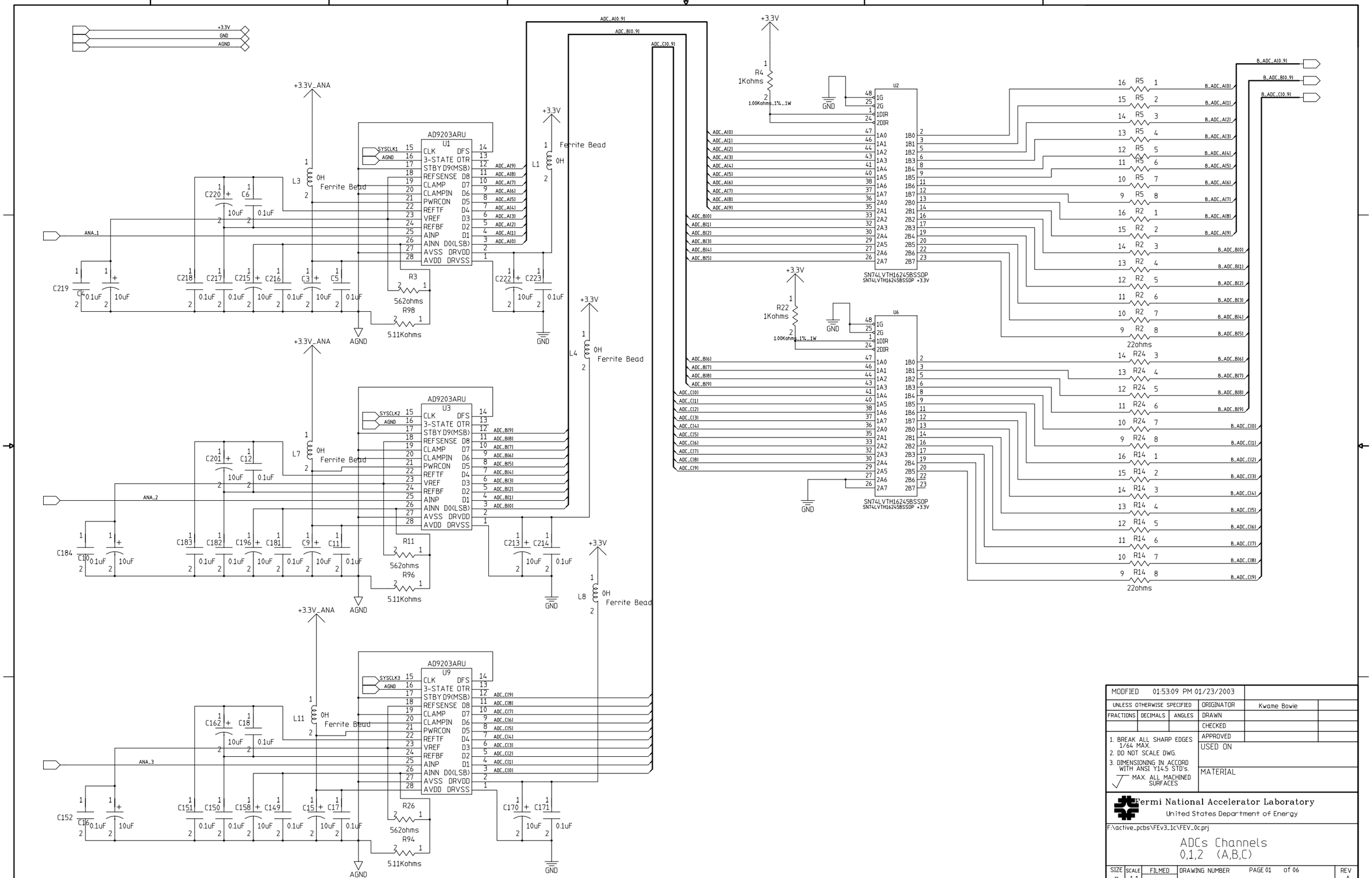

MODIFIED 01:53:09 PM 01/23/2003				
UNLESS OTHERWISE SPECIFIED			ORIGINATOR	Kwame Bowie
FRACTIONS	DECIMALS	ANGLES	DRAWN	
			CHECKED	
1. BREAK ALL SHARP EDGES 1/64 MAX.			APPROVED	
2. DO NOT SCALE DWG.			USED ON	
3. DIMENSIONING IN ACCORD WITH ANSI Y14.5 STD's.				
MAX. ALL MACHINED SURFACES			MATERIAL	

Fermi National Accelerator Laboratory
United States Department of Energy

F:\active_pcbs\FEv3_1c\FEV_0c.prj

ADCs Channels
0,1,2 (A,B,C)

SIZE	SCALE	FILMED	DRAWING NUMBER	PAGE 01 of 06	REV
D	1:1		ED-173485		A

H=8ND; V=4LA

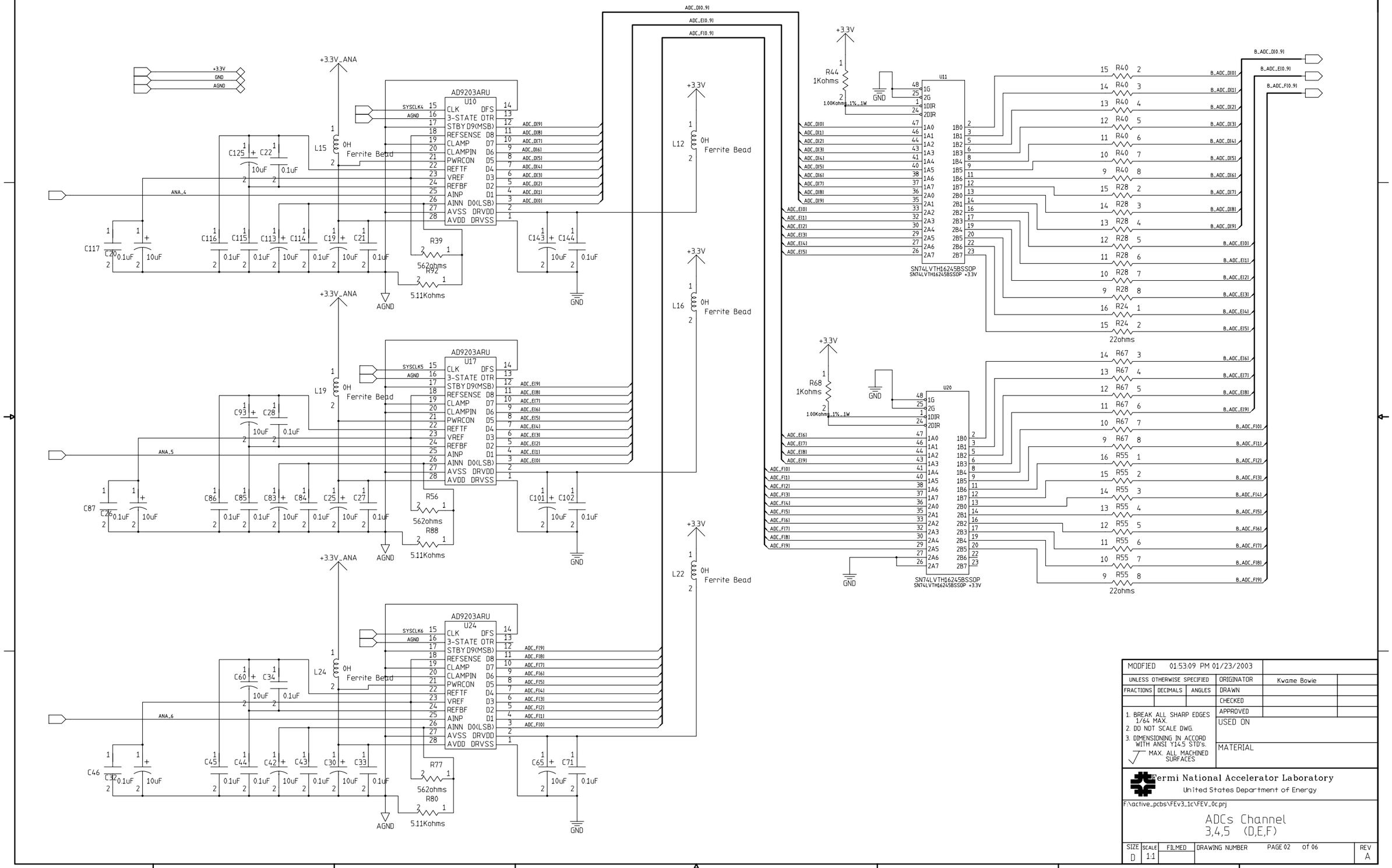

MODIFIED 01:53:09 PM 01/23/2003			
UNLESS OTHERWISE SPECIFIED		ORIGINATOR	Kwame Bowie
FRACTIONS	DECIMALS	ANGLES	DRAWN
			CHECKED
			APPROVED

1. BREAK ALL SHARP EDGES 1/64 MAX.
2. DO NOT SCALE DWG.
3. DIMENSIONING IN ACCORD WITH ANSI Y14.5 STD'S.

MAX. ALL MACHINED SURFACES

USED ON

MATERIAL

Fermi National Accelerator Laboratory
United States Department of Energy

F:\active_pcbs\FEv3_1c\FEV_0c.prj

ADCs Channel
3,4,5 (D,E,F)

SIZE	SCALE	FILMED	DRAWING NUMBER	PAGE 02 of 06	REV
D	1:1				A

H=8ND; V=4LA

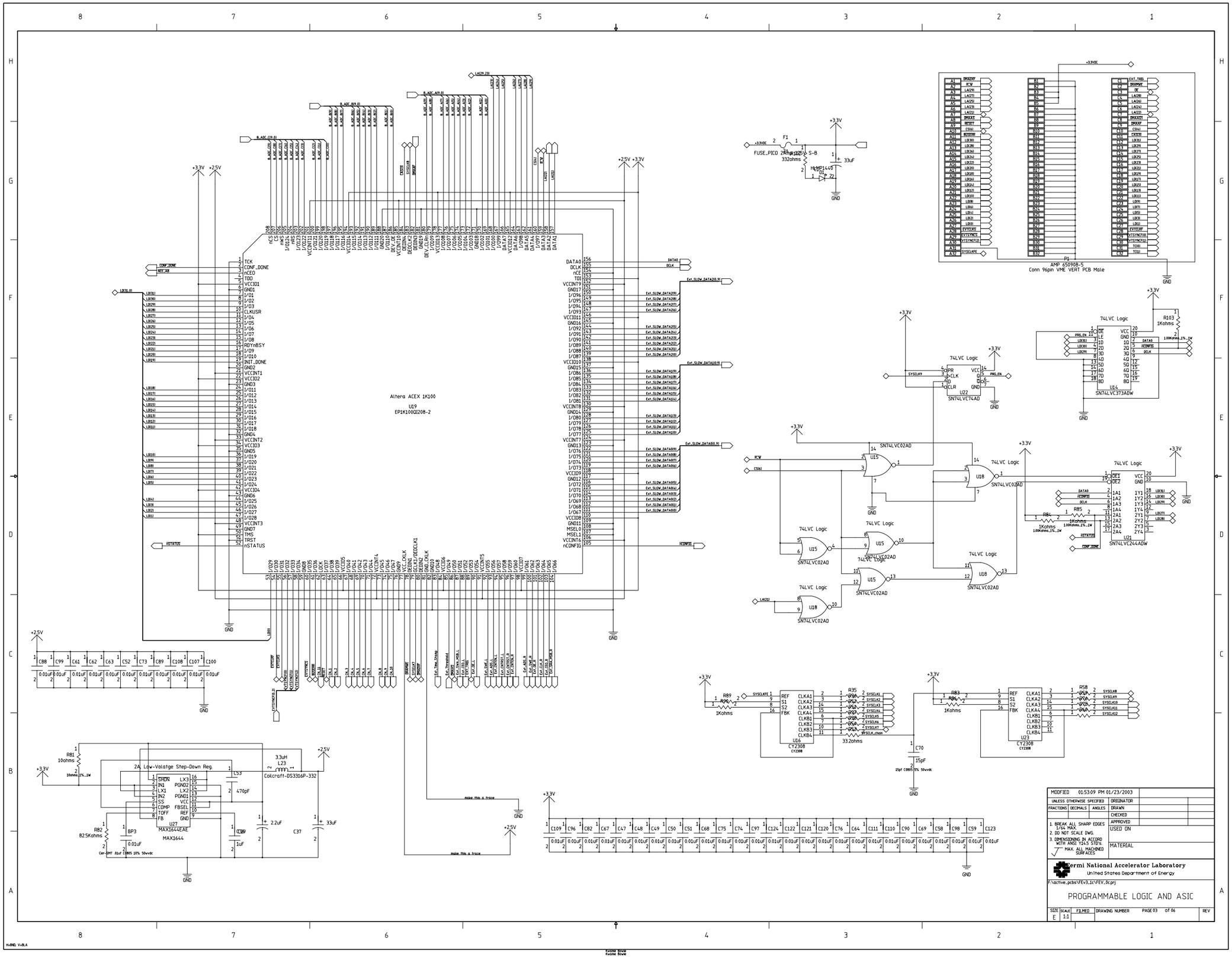

MODIFIED 01:53:09 PM 01/23/2003

UNLESS OTHERWISE SPECIFIED

FRACTIONS	DECIMALS	ANGLES

1. BREAK ALL SHARP EDGES 1/64 MAX.
2. DO NOT SCALE DWG.
3. DIMENSIONING IN ACCORD WITH ANSI Y14.5 STD'S.

MAX. ALL MACHINED SURFACES

ORIGINATOR
DRAWN
CHECKED
APPROVED
USED ON
MATERIAL

Fermi National Accelerator Laboratory
United States Department of Energy

F:\active_pcbs\FEv3_1c\FEV_0c.prj

PROGRAMMABLE LOGIC AND ASIC

SIZE	SCALE	FILMED	DRAWING NUMBER	PAGE 03 of 06	REV
E	1:1				

H=GND, V=BLA

Kwame Bowie

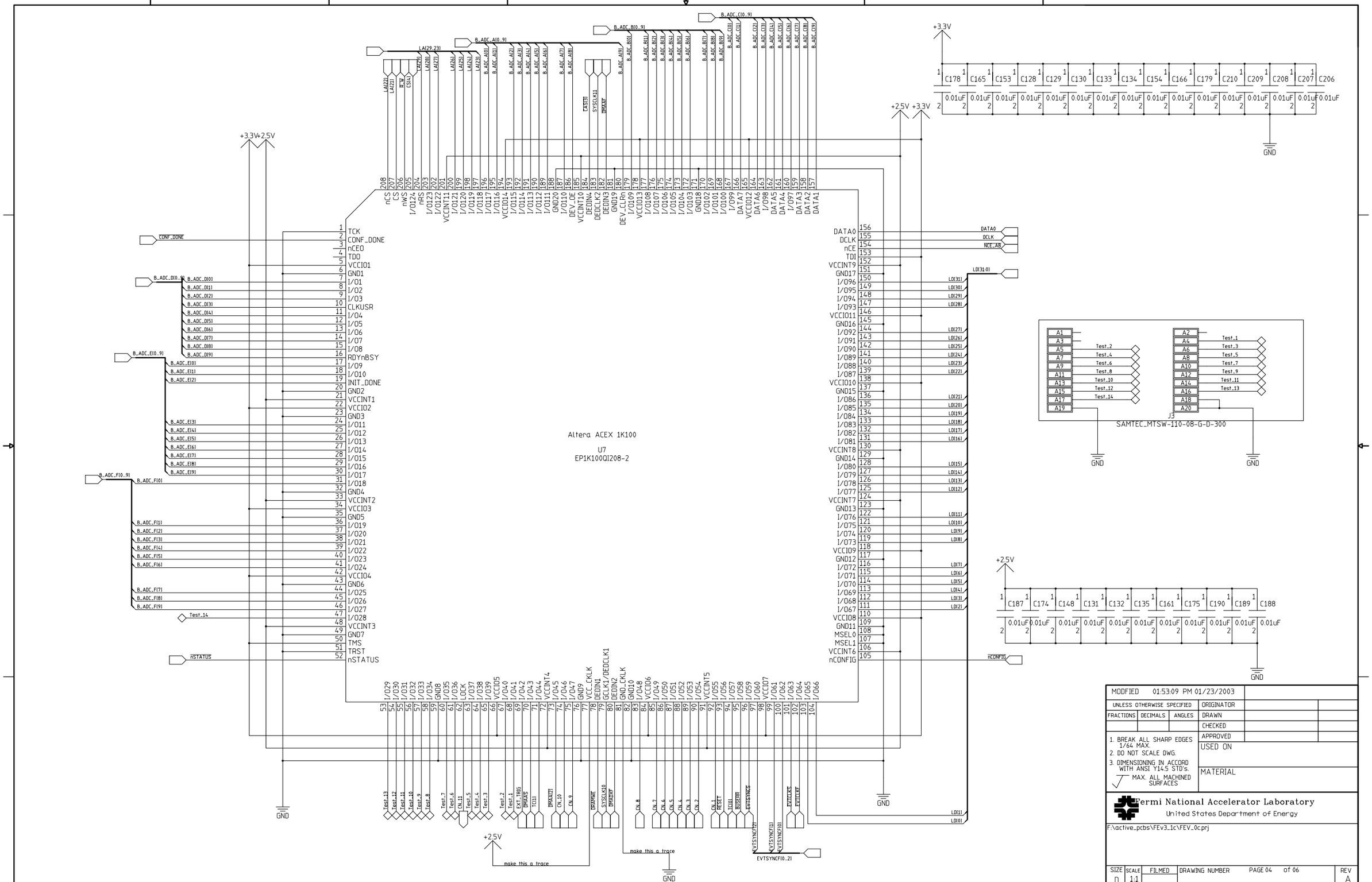
Altera ACEX 1K100
U7
EP1K100QI208-2
SAMTEC_MTSW-110-08-G-D-300
J3
+3.3V
+2.5V
+3.3V+2.5V
GND
CONF_DONE
nSTATUS
nCONFIG
DATA0
DCLK
nCE_AB
LD[31:0]
EVTSYNCF[0..2]
make this a trace
MODIFIED 01:53:09 PM 01/23/2003
UNLESS OTHERWISE SPECIFIED
FRACTIONS DECIMALS ANGLES
ORIGINATOR
DRAWN
CHECKED
APPROVED
USED ON
1. BREAK ALL SHARP EDGES 1/64 MAX.
2. DO NOT SCALE DWG.
3. DIMENSIONING IN ACCORD WITH ANSI Y14.5 STD's.
MAX. ALL MACHINED SURFACES
MATERIAL
Fermi National Accelerator Laboratory
United States Department of Energy
F:\active_pcbs\FEv3_1c\FEV_0c.prj
SIZE D
SCALE 1:1
FILMED
DRAWING NUMBER
PAGE 04 of 06
REV A
H=8ND; V=4LA

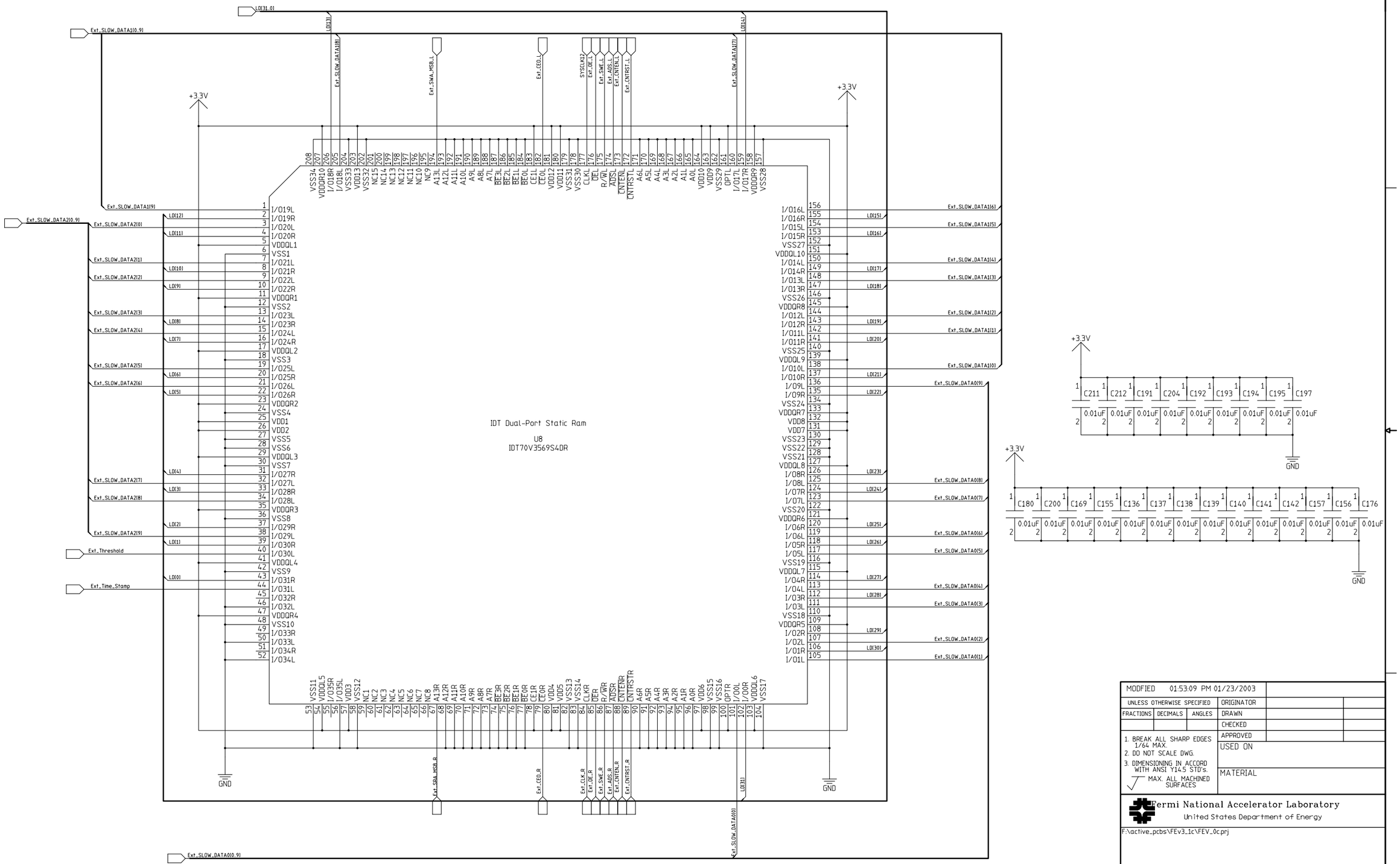

MODIFIED 01:53:09 PM 01/23/2003				
UNLESS OTHERWISE SPECIFIED			ORIGINATOR	
FRACTIONS	DECIMALS	ANGLES	DRAWN	
			CHECKED	
			APPROVED	

1. BREAK ALL SHARP EDGES 1/64 MAX.
2. DO NOT SCALE DWG.
3. DIMENSIONING IN ACCORD WITH ANSI Y14.5 STD'S.

√ MAX. ALL MACHINED SURFACES

USED ON

MATERIAL

Fermi National Accelerator Laboratory
United States Department of Energy

F:\active_pcbs\FEv3_1c\FEV_0c.prj

SIZE	SCALE	FILMED	DRAWING NUMBER	PAGE 05 of 06	REV
D	1:1				A

H=8ND; V=4LA

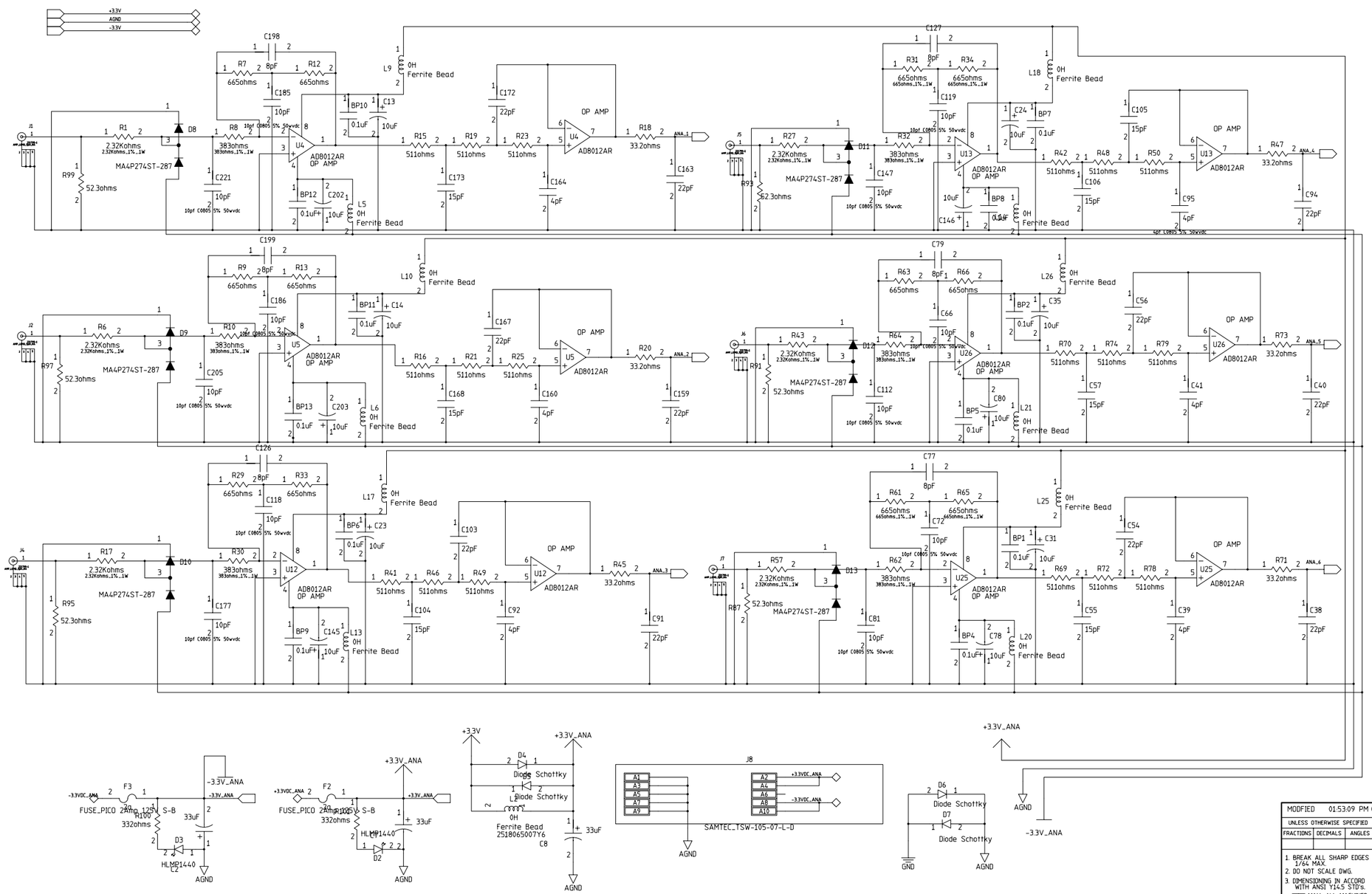

MODIFIED 01:53:09 PM 01/23/2003			
UNLESS OTHERWISE SPECIFIED		ORIGINATOR	
FRACTIONS	DECIMALS	ANGLES	DRAWN
			CHECKED
			APPROVED
1. BREAK ALL SHARP EDGES 1/64 MAX. 2. DO NOT SCALE DWG. 3. DIMENSIONING IN ACCORD WITH ANSI Y14.5 STD's. MAX. ALL MACHINED SURFACES			USED ON
			MATERIAL

Fermi National Accelerator Laboratory
United States Department of Energy

F:\active_pcbs\FEV3_1c\FEV_0c.prj

ANALOG PROCESSING AMPLIFIERS (G= -1/2)
BESSEL FILTER (Fc = 16MHz)

SIZE	SCALE	FILMED	DRAWING NUMBER	PAGE 06 of 06	REV
F	1:1				

H:BND: V:6LA