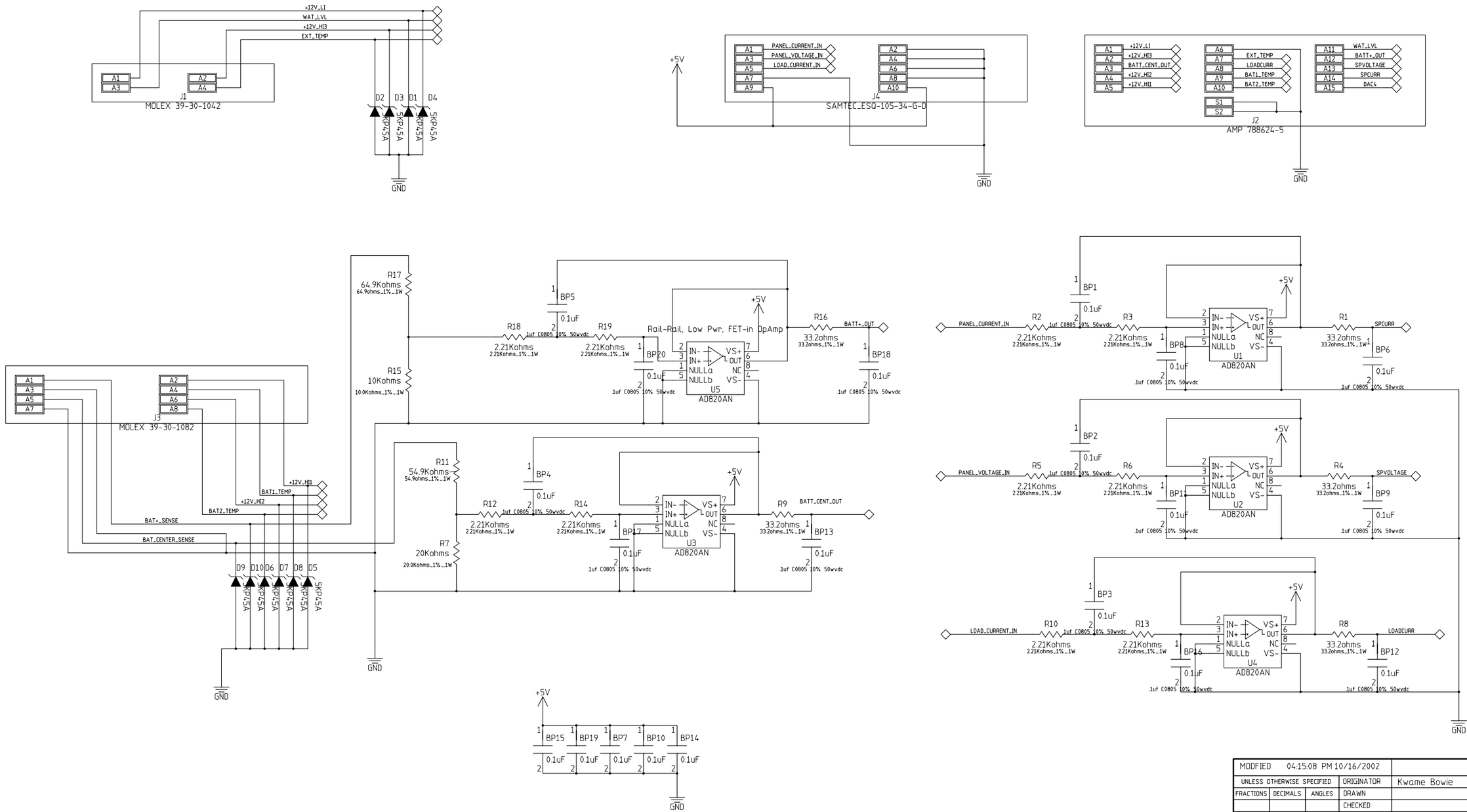

MODFIED 04:15:08 PM 10/16/2002				
UNLESS OTHERWISE SPECIFIED			ORIGINATOR	Kwame Bowie
FRACTIONS	DECIMALS	ANGLES	DRAWN	
			CHECKED	
			APPROVED	

1. BREAK ALL SHARP EDGES 1/64 MAX.
2. DO NOT SCALE DWG.
3. DIMENSIONING IN ACCORD WITH ANSI Y14.5 STD's.

MAX. ALL MACHINED SURFACES

USED ON

MATERIAL

Fermi National Accelerator Laboratory
United States Department of Energy

C:\archive_pcbs\microTPCB_Board_B\microTPCB_B.prj

SIZE	SCALE	FILMED	DRAWING NUMBER	PAGE 01 of 01	REV
D	1:1		ED-173484		A

H=8ND, V=4LA