NuDrive Stepper
Interface Board 900-1012-001

Drawn by Dale Miller, 6-14-1 & 6-15-1

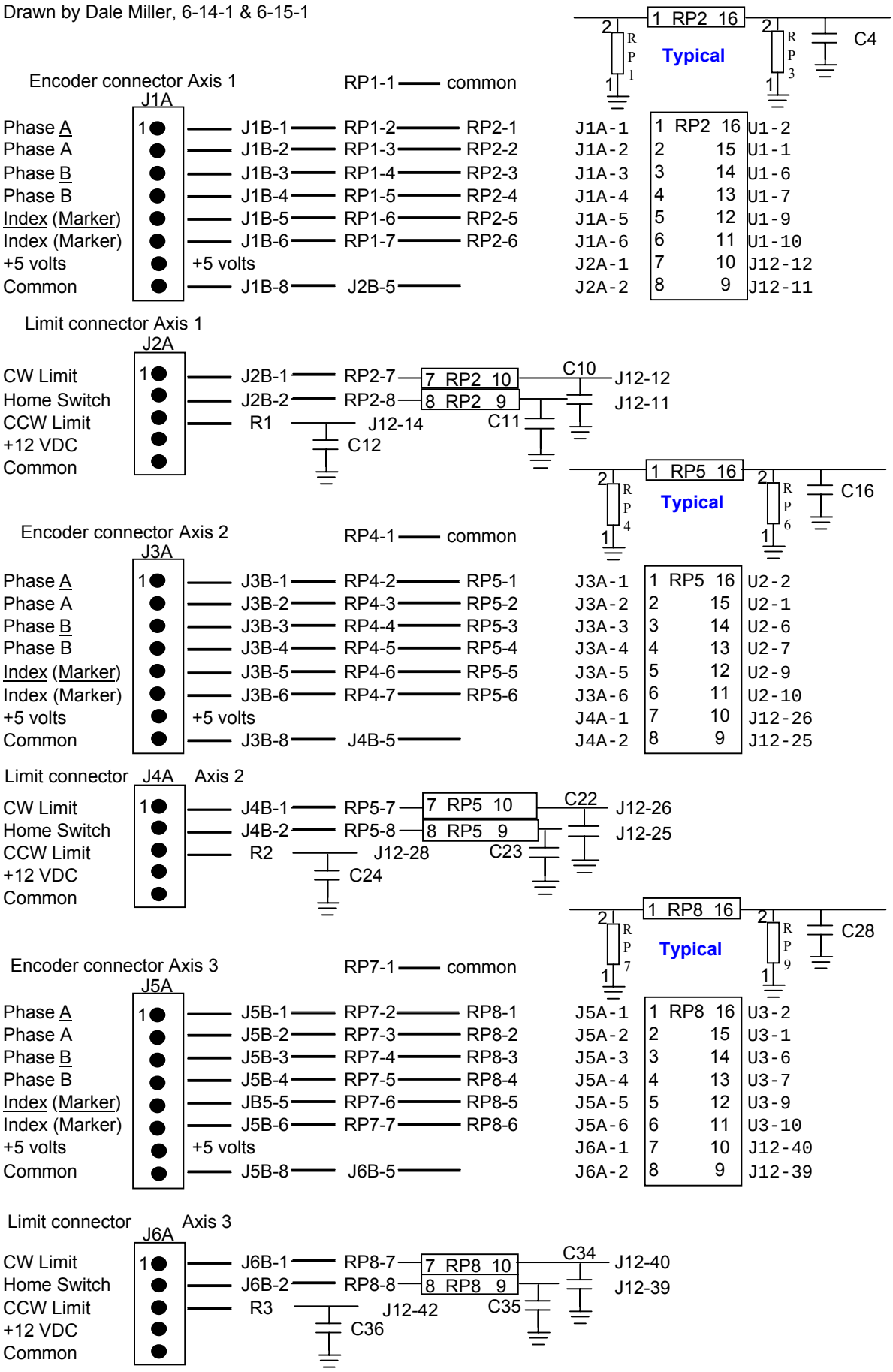

NuDrive Stepper
Interface Board 900-1012-001

NuDrive Stepper
Interface Board 900-1012-001

RP1, RP4, RP7 is a 7 legged resistor pack connected as shown in the Typical drawing

RP3, RP6, RP9 is a 7 legged resistor pack connected as shown in the Typical drawing

J7A, J8A, J9A connect to the 2P PULSE MOTOR DRIVER

1 .	CW -	Wht
2 .	Inhibit	(NC)
3 .	CCW -	Grn
4 .	FREE	Red
5 .	GND	Blk

U1

	IN A -	1	16	Vcc	+ 5 Vdc
	IN A +	2	15	IN B -	+ 5 Vdc
out to J12-6	OUT A	3	14	IN B +	connected to gnd
+ 5 Vdc	ENABLE A/C	4	13	OUT B	no connection
out to J12-8	OUT C	5	12	ENABLE B/D	+ 5 Vdc
	IN C -	6	11	OUT D	out to J12-10
	IN C +	7	10	IN D +	
	GND	8	9	IN D -	

U 1, U2, U3
MC3486P

U2

	IN A -	1	16	Vcc	+ 5 Vdc
	IN A +	2	15	IN B -	+ 5 Vdc
out to J12-20	OUT A	3	14	IN B +	connected to gnd
+ 5 Vdc	ENABLE A/C	4	13	OUT B	no connection
out to J12-22	OUT C	5	12	ENABLE B/D	+ 5 Vdc
	IN C -	6	11	OUT D	out to J12-24
	IN C +	7	10	IN D +	
	GND	8	9	IN D -	

U3

	IN A -	1	16	Vcc	+ 5 Vdc
	IN A +	2	15	IN B -	+ 5 Vdc
out to J12-34	OUT A	3	14	IN B +	connected to gnd
+ 5 Vdc	ENABLE A/C	4	13	OUT B	no connection
out to J12-36	OUT C	5	12	ENABLE B/D	+ 5 Vdc
	IN C -	6	11	OUT D	out to J12-38
	IN C +	7	10	IN D +	
	GND	8	9	IN D -	

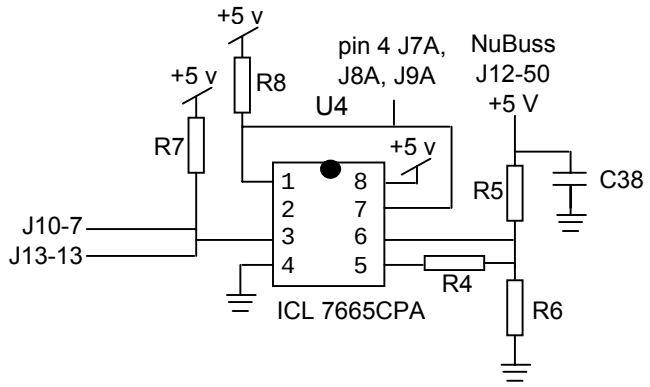

J12	connects to
1	J7A-2
2	J7A-1
3	N.C.
4	J7A-3
5	Common
6	U1-3
7	Spare
8	U1-5
9	Common
10	U1-11
11	C11 & RP2-9
12	C10 & RP2-10
13	Common
14	C12 & R1
15	J8A-2
16	J8A-1
17	N.C.
18	J8A-3
19	Common
20	U2-3
21	Spare
22	U2-5
23	Common
24	U2-11
25	C23 & RP5-9
26	C22 & RP5-10
27	Common
28	C24 & R2
29	J9A-2
30	J9A-1
31	N.C.
32	J9A-3
33	Common
34	U3-3
35	Spare
36	U3-5
37	Common
38	U3-11
39	C35 & RP8-9
40	C34 & RP8-10
41	Common
42	C36 & R3
43	Common
44	JP1-12 & JP2-12
45	JP1-10 & JP2-10
46	JP1-8 & JP2-8
47	JP1-6 & JP2-6
48	JP1-4 & JP2-4
49	JP1-2 & JP2-2
50	R5 (+5 volts)

	J7A	connects to
cw - (wht)	1	J12-2
Inhibit (NC)		J12-1
ccw - (grn)		J12-4
free (red)		U4-1 & 7
gnd (blk)		Common

J8A	connects to
1	J12-16
	J12-15
	J12-18
	U4-1 & 7
	Common

J9A	connects to
1	J12-30
2	J12-29
3	J12-32
4	U4-1 & 7
5	Common

NuDrive Stepper
Interface Board 900-1012-001

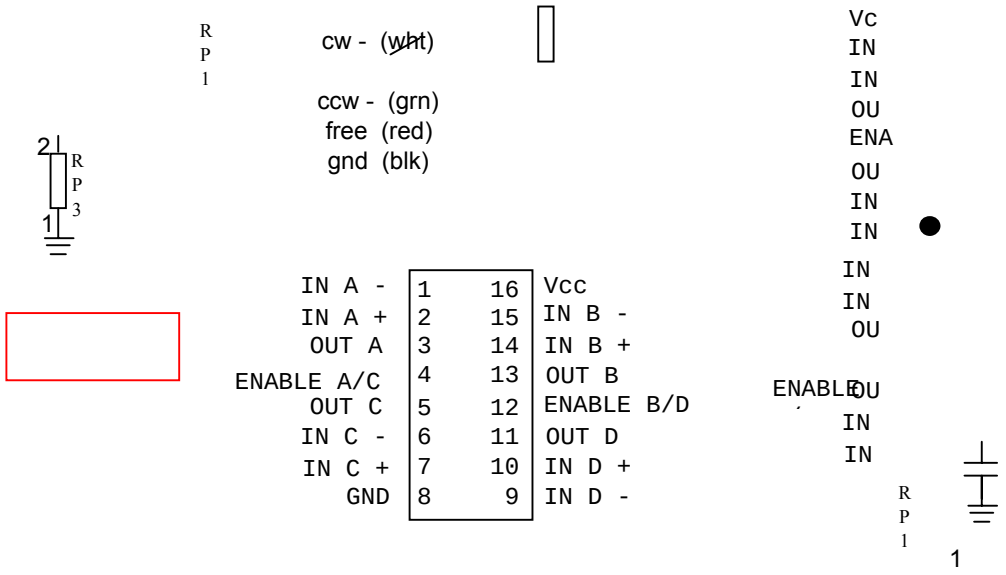

NuDrive Stepper
Interface Board 900-1012-001

J10	connects to
1	JP2-1 & J13-11
2	JP2-3 & J13-9
3	JP2-5 & J13-7
4	JP2-7 & J13-5
5	JP2-9 & J13-3
6	JP2-11 & J13-1
7	J13-13
8	Common

J10 connector has only 1 wire on pin 7 which goes to the ENABLE Sw.

J11	connects to
1	JP1-1
2	JP1-3
3	JP1-5
4	JP1-7
5	JP1-9
6	JP1-11
7	+12 Volts
8	Common

J11 has no connector

J13	connects to
1	J10-6 & JP2-6
2	Common
3	J10-5 & JP2-5
4	Common
5	J10-4 & JP2-4
6	Common
7	J10-3 & JP2-3
8	Common
9	J10-2 & JP2-2
10	Common
11	J10-1 & JP2-1
12	Common
13	J10-7
14	Common
15	N.C.
16	Common

J13 Connects via a ribbon cable to the I / O Board
Which isn't used

JP1	
1	J11-1
2	JP2-2 & J12-49
3	J11-3
4	JP2-4 & J12-48
5	J11-5
6	JP2-6 & J12-47
7	J11-7
8	JP2-8 & J12-46
9	J11-9
10	JP2-10 & J12-45
11	J11-11
12	JP2-12 & J12-44

JP2	
1	J10-1
2	JP1-2 & J12-49
3	J10-3
4	JP1-4 & J12-48
5	J10-5
6	JP1-6 & J12-47
7	J10-7
8	JP1-8 & J12-46
9	J10-9
10	JP1-10 & J12-45
11	J10-11
12	JP1-12 & J12-44

No jumpers on JP1
Jumpers on JP2, 1 to 2, 3 to 4 5 to 6, 7 to 8 and so on. Total 6 jumpers.

+5 NuBus	+5 Volts	12VDC	Common
	Red	Wht	Blk
J12-50	J14B-1	J14B-2	J14B-4
C38			
R5	J14A-1	J14A-2	J14A-4
	J1A-7	J11-7	J1A-8
	J3A-7	J2A-4	J2A-5
	J5A-7	J4A-4	J3A-8
	U1-16	J6A-4	J4A-5
	U2-16	J2B-4	J5A-8
	U3-16	J4B-4	J6A-5
	U4-8	J6B-4	J1B-8
	C1	C2	J2B-5
	C13	C14	J3B-8
	C25	C26	J4B-5
	C39	C40	J5B-8
	C37		J6B-5
	R7		J7A-5
	R8		J8A-5
			J9A-5
			U1-8
			U1-14
			U2-8
			U2-14

Note: Items in BLUE are places on the board, but no component

UI, U 2, U3 CHIP PINS	U1	U2
1	C4	C16
2	C5	C17
7	C6	C18
6	C7	C19
9	C8	C20
10	C9	C21
4 &12	C3	C15
4 &12	+ 5 volts on Enable pin	

RP2, 5, 8	RP2	RP5
10	C10	C22
9	C11	C23
R1, R2, R3	C12	C24
+ 5 V bus	C1	C13
+ 12 V bus	C2	C14
+ 5 V bus	C3	C15

NuDrive Stepper
Interface Board 900-1012-001

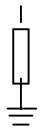

NuDrive Stepper
Interface Board 900-1012-001

Common
Input
Conn.

J10-8
J11-8
J12-5
J12-9
J12-13
J12-19
J12-23
J12-27
J12-33
J12-37
J12-41
J12-43

RP3-1
RP6-1
RP9-1

U3-8
U3-14
U4-4

All Cap's

U3
C28
C29
C30
C31
C32
C33
C27

ns

RP8
C34
C35
C36

C25
C26
C27

NuDrive Stepper
Interface Board 900-1012-001