REV.	DESCRIPTION	DRAWN	DATE
		APPROVED	DATE

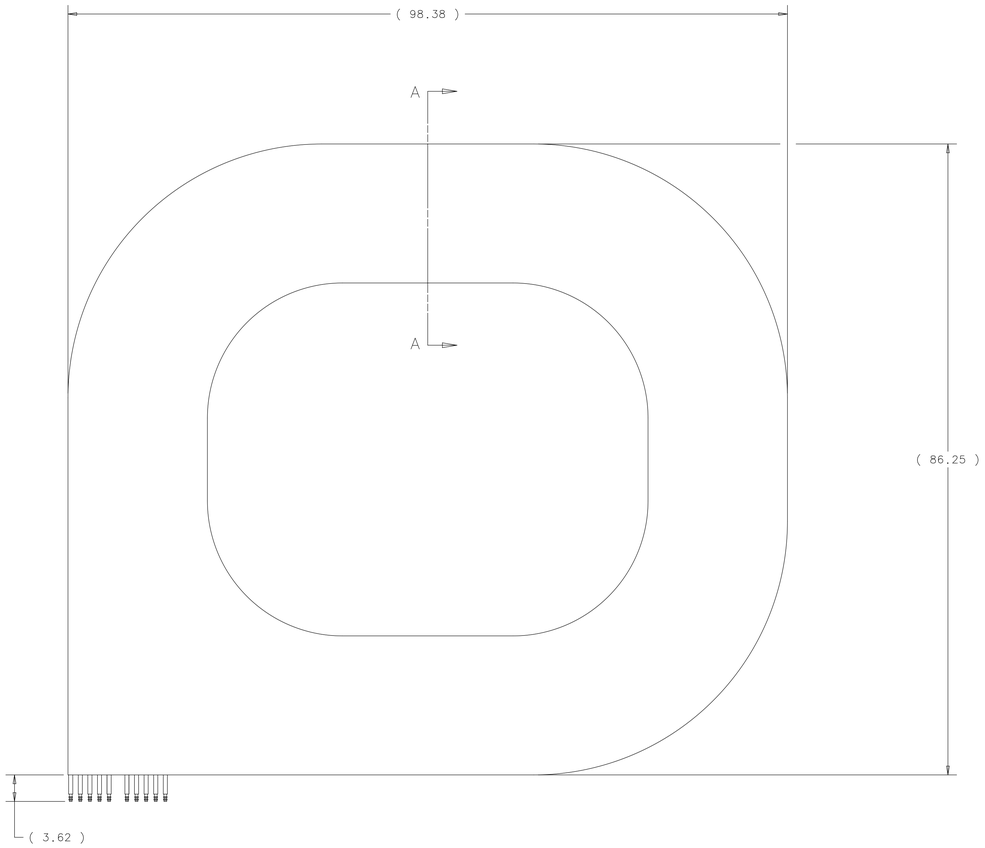

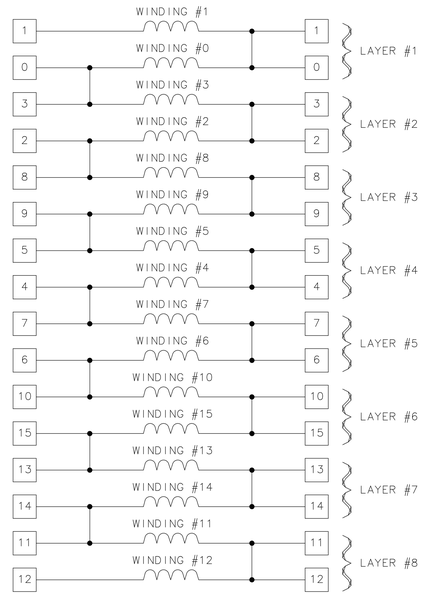

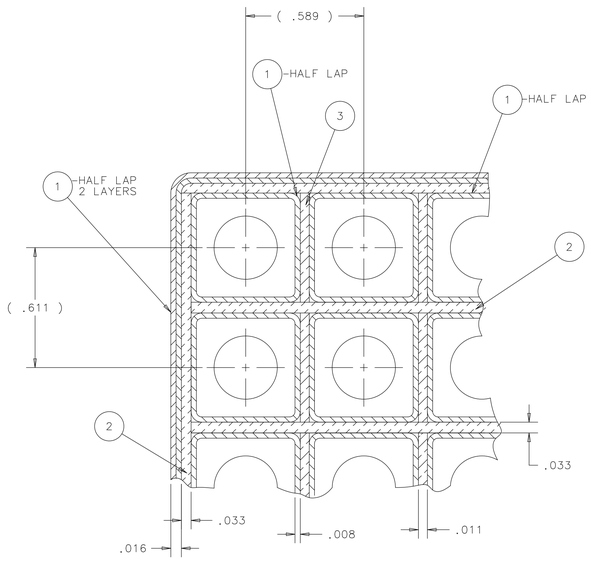

DETAIL C
SCALE: NONE

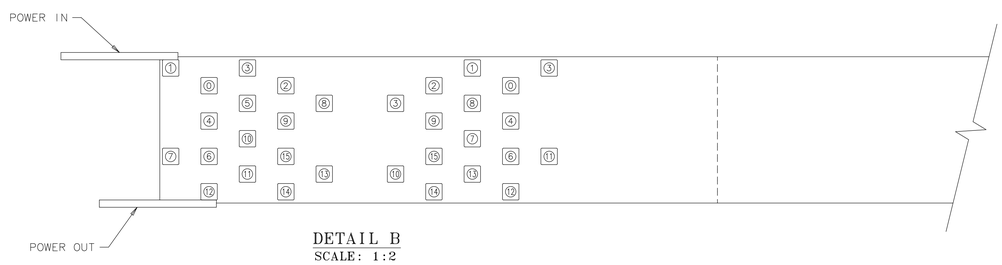

DETAIL B
SCALE: 1:2

NOTES

1. COIL HAS 8 LAYERS, 32 TURNS PER LAYER = 256 TOTAL TURNS.
2. EACH LAYER HAS 16 TURNS FOR (1) WATER PATH (ONE INLET, ONE OUTLET) FOR A TOTAL OF 16 INLETS AND 16 OUTLETS PER ASSEMBLY.
3. ONE COIL ASSEMBLY ESTIMATED WEIGHT IS 2.1 TONS.
4. FOR REINSULATION SPECIFICATION SEE FERMILAB ENGINEERING SPECIFICATION # 9216.000-ES-397517.

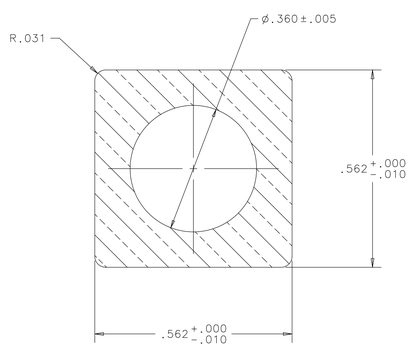

CONDUCTOR CROSS SECTION

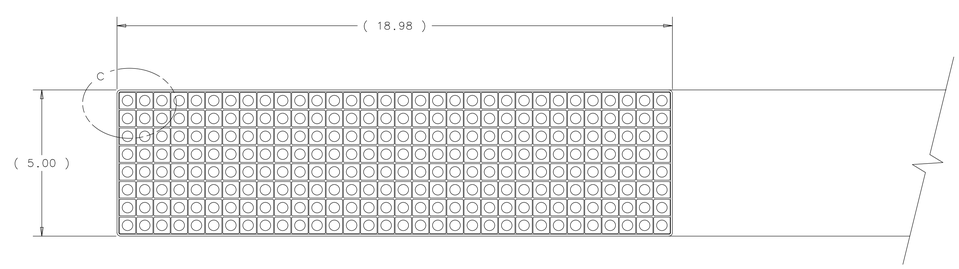

SECTION A-A
SCALE: 1:2

ITEM NO.	PART NO.	DESCRIPTION OR SIZE	QTY. REQ.
3	COML	SCOTCH PLY .011" THK.	AS REQ,D
2	COML	SCOTCH PLY .033" THK.	AS REQ,D
1	COML	B-STAGE POLYESTER/GLASS TAPE 2" WIDE X .004 THK.	AS REQ,D

PARTS LIST

UNLESS OTHERWISE SPECIFIED			ORIGINATOR	C GROZIS	5/01
.XX	.XXX	ANGLES	DRAWN	G SMITH	5/11/01
± ——	±.005	± ——	CHECKED	C NILA	6/15/01
			APPROVED	C GROZIS	6/15/01

1. BREAK ALL SHARP EDGES .015 MAX.
2. DO NOT SCALE DRWG.
3. DIMENSIONING IN ACCORD WITH ANSI Y14.5M-1982 STD'S.
4. ALL DIMENSIONS ARE IN INCHES.

USED ON ——————

MAX. ALL MACHINED SURFACES

MATERIAL COPPER (SEE CONDUCTOR CROSS SECTION)

FERMI NATIONAL ACCELERATOR LABORATORY
UNITED STATES DEPARTMENT OF ENERGY

PPD/MECHANICAL DEPARTMENT
JOLLY GREEN GIANT MAGNET
BOTTOM POLE TOP COIL

SCALE	DRAWING NUMBER	SHEET NO.	REV.
1:8 & NOTED	9204.250-ME-397516	1 OF 1	