REV	DESCRIPTION	DRAWN	DATE
		APPROVED	DATE

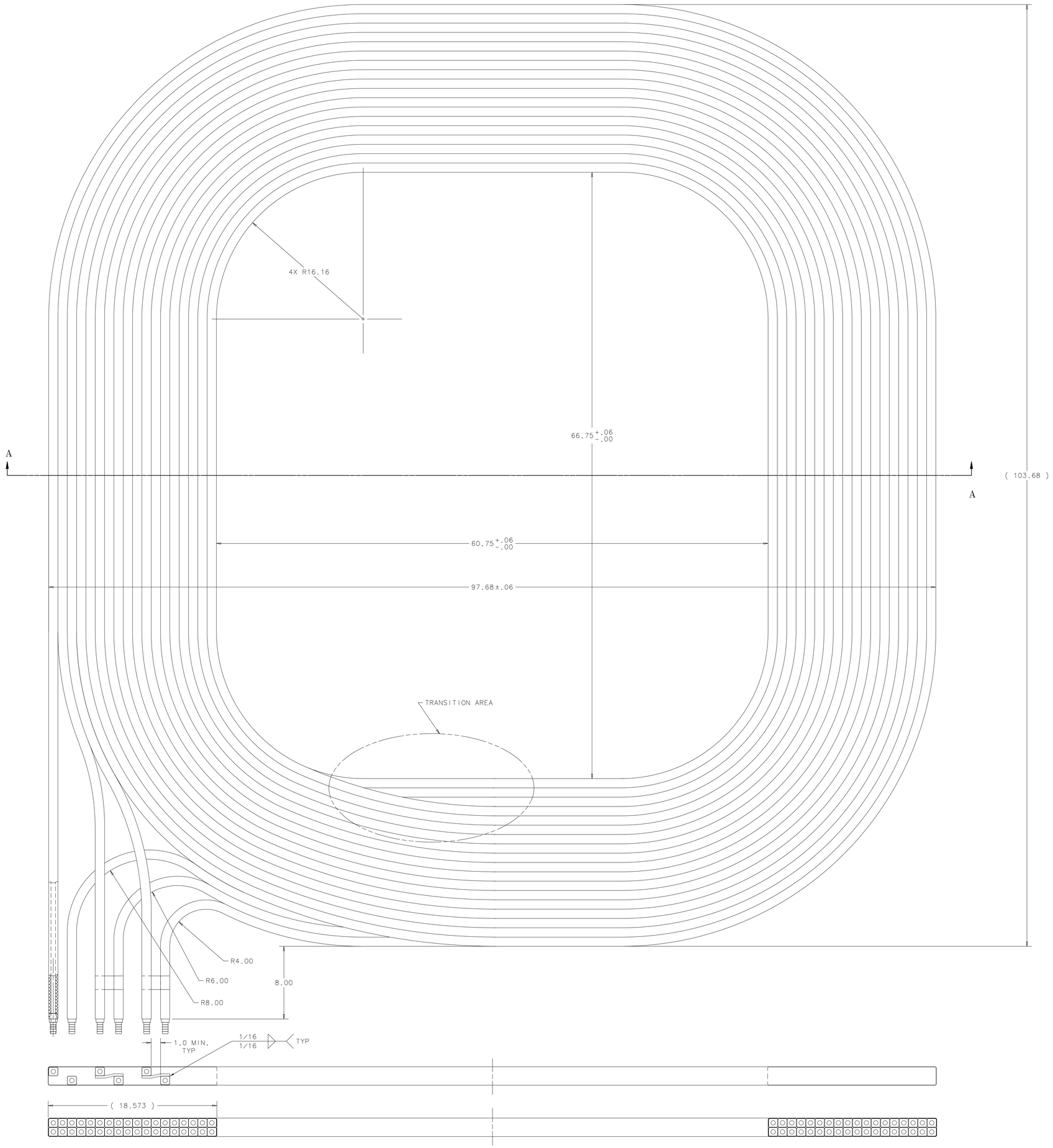

SECTION A-A

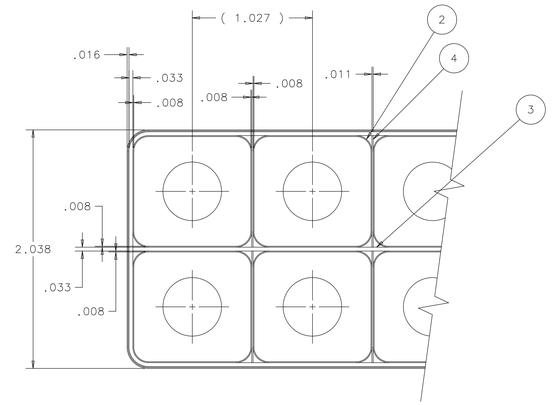

DETAIL B
SCALE: 2:1

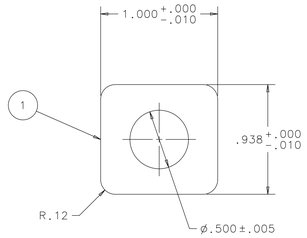

CONDUCTOR CROSS SECTION
SCALE: 2:1

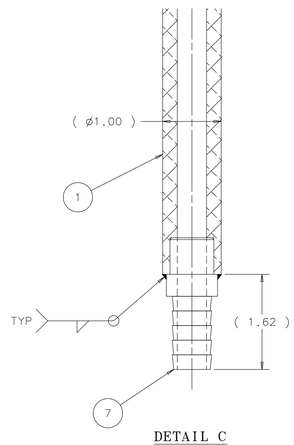

DETAIL C
SCALE: 1:2

ITEM	PART NO.	DESCRIPTION OR SIZE	QTY.
6	MB-421263	BARBED HOSE WATER CONECTION	6
5	MB-421262	ALUMINUM BUS BAR	2
4	COM'L	SCOTCH PLY .011 THK.	AS REQ'D
3	COM'L	SCOTCH PLY .033 THK.	AS REQ'D
2	COM'L	B-STAGE POLYESTER/GLASS TAPE 2" WIDE X .004 THK.	AS REQ'D
1	COM'L	ALUMINUM CONDUCTOR 1.00 X .938	AS REQ'D

PARTS LIST

UNLESS OTHERWISE SPECIFIED			ORIGINATOR	J.KILMER	22-MAY-2006
.XX	.XXX	ANGLES	DRAWN	G.SMITH	22-MAY-2006
± .06	± ---	± ---	CHECKED		
			APPROVED		

1. BREAK ALL SHARP EDGES .015 MAX.
2. DO NOT SCALE DRAWING.
3. DIMENSIONS BASED UPON ASME Y14.5M-1994
4. MAX. ALL MACH. SURFACES √
5. DRAWING UNITS: U.S. INCH

USED ON: ---

MATERIAL: SEE PARTS LIST ABOVE

FERMI NATIONAL ACCELERATOR LABORATORY
UNITED STATES DEPARTMENT OF ENERGY

E907/MAGNETS
JOLLY GREEN GIANT
COIL WINDING (1) PASS

SCALE	DRAWING NUMBER	SHEET	REV
1:8 AS NOTED	3907.530-ME-421260	1 OF 1	

CREATED WITH : Ideas11NXSeries GROUP: PPD/MECHANICAL DEPARTMENT

Created: 12:51:19 on 11-04-07 (D-M-Y) By: edchi State: 1-INITIAL