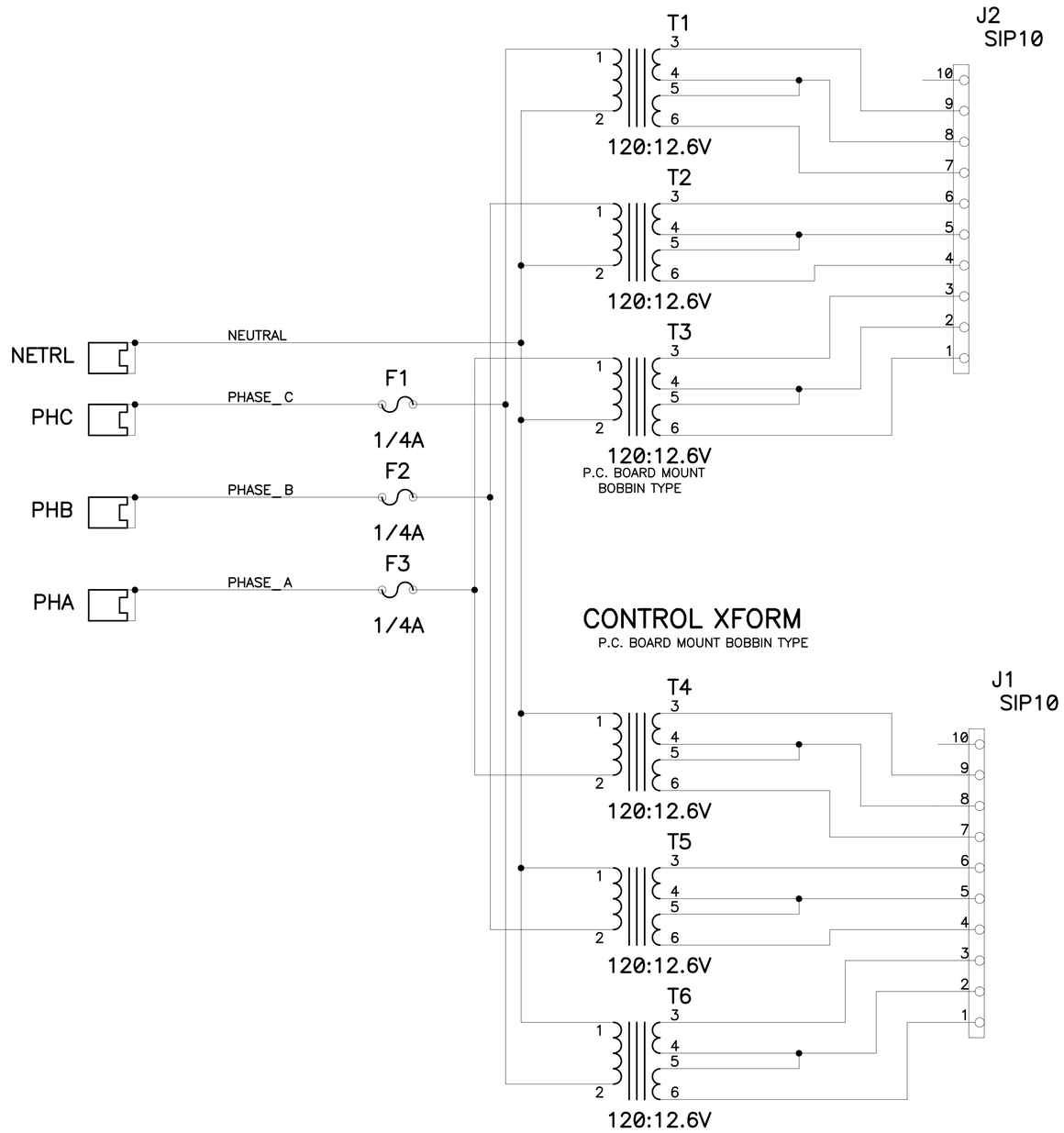

Title 13:45:17 Fri Dec 28 2001 CONTROL POWER XFORMER BOARD		
Size B	Number 3740.412-EB-286061	Rev A
Date 6/17/1989	DAVID L. HUFFMAN	
Filename Blsxbd.sch	Sheet 1 of 2	

FUSES

U1 FUSECLIP 2AG
U2 FUSECLIP 2AG
U4 FUSECLIP 2AG
U3 FUSECLIP 2AG
U6 FUSECLIP 2AG
U5 FUSECLIP 2AG

U7 FUSECOVER PLASTIC
U8 FUSECOVER PLASTIC
U9 FUSECOVER PLASTIC

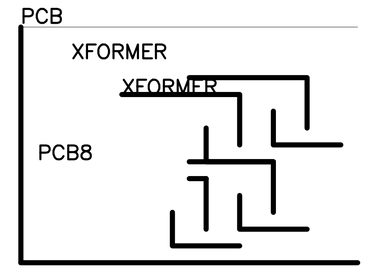

XFORMER MTG

NPART

MB286035:C

U10 SCREW4-40 1-1/2"	U13 SCREW4-40 1-1/2"	U16 SCREW4-40 1-1/2"	U28 SCREW4-40 1-1/2"
FLATWASHER #4	FLATWASHER #4	FLATWASHER #4	FLATWASHER #4
NUT4-40 U12	NUT4-40 U15	NUT4-40 U18	NUT4-40 U30
U19 SCREW4-40 1-1/2"	U22 SCREW4-40 1-1/2"	U25 SCREW4-40 1-1/2"	U31 SCREW4-40 1-1/2"
FLATWASHER #4	FLATWASHER #4	FLATWASHER #4	FLATWASHER #4
NUT4-40 U21	NUT4-40 U24	NUT4-40 U27	NUT4-40 U33
U34 SCREW4-40 1-1/2"	U37 SCREW4-40 1-1/2"	U40 SCREW4-40 1-1/2"	U43 SCREW4-40 1-1/2"
FLATWASHER #4	FLATWASHER #4	FLATWASHER #4	FLATWASHER #4
NUT4-40 U36	NUT4-40 U39	NUT4-40 U42	NUT4-40 U45

Title 13:45:21 Fri Dec 28 2001 CONTROL POWER XFORMER BOARD		
Size B	Number 3740.412-EB-286061	Rev A
Date 6/17/1989	DAVID L. HUFFMAN	
Filename Blsxbd.sch	Sheet 2 of 2	