Next Page

NPART LD

COOLER:C

H2O COOLED

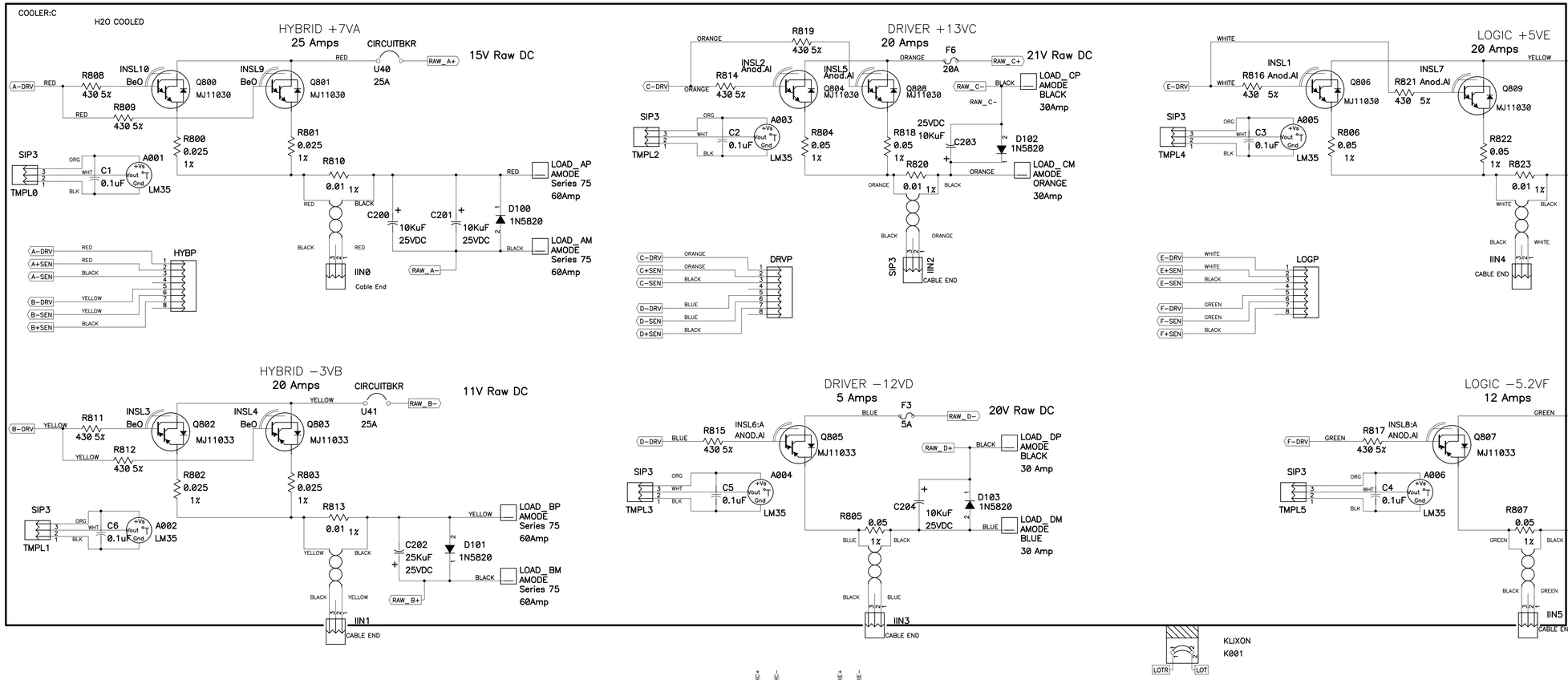

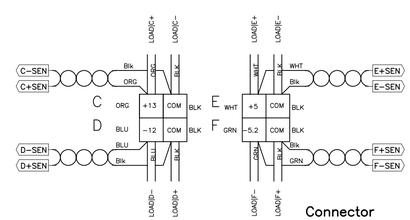

Connector Arrangement

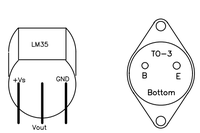

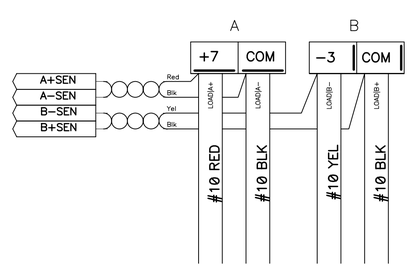

Title	Wed Mar 27 2002 21:24:00 BLS OUTPUT MODULE	
Size D	Number 3740.412 ED 286068	Rev G
Date 5/30/97		David L. Huffman
Filename blsoutmkii.sch		Sheet 1 of 3

Next Page

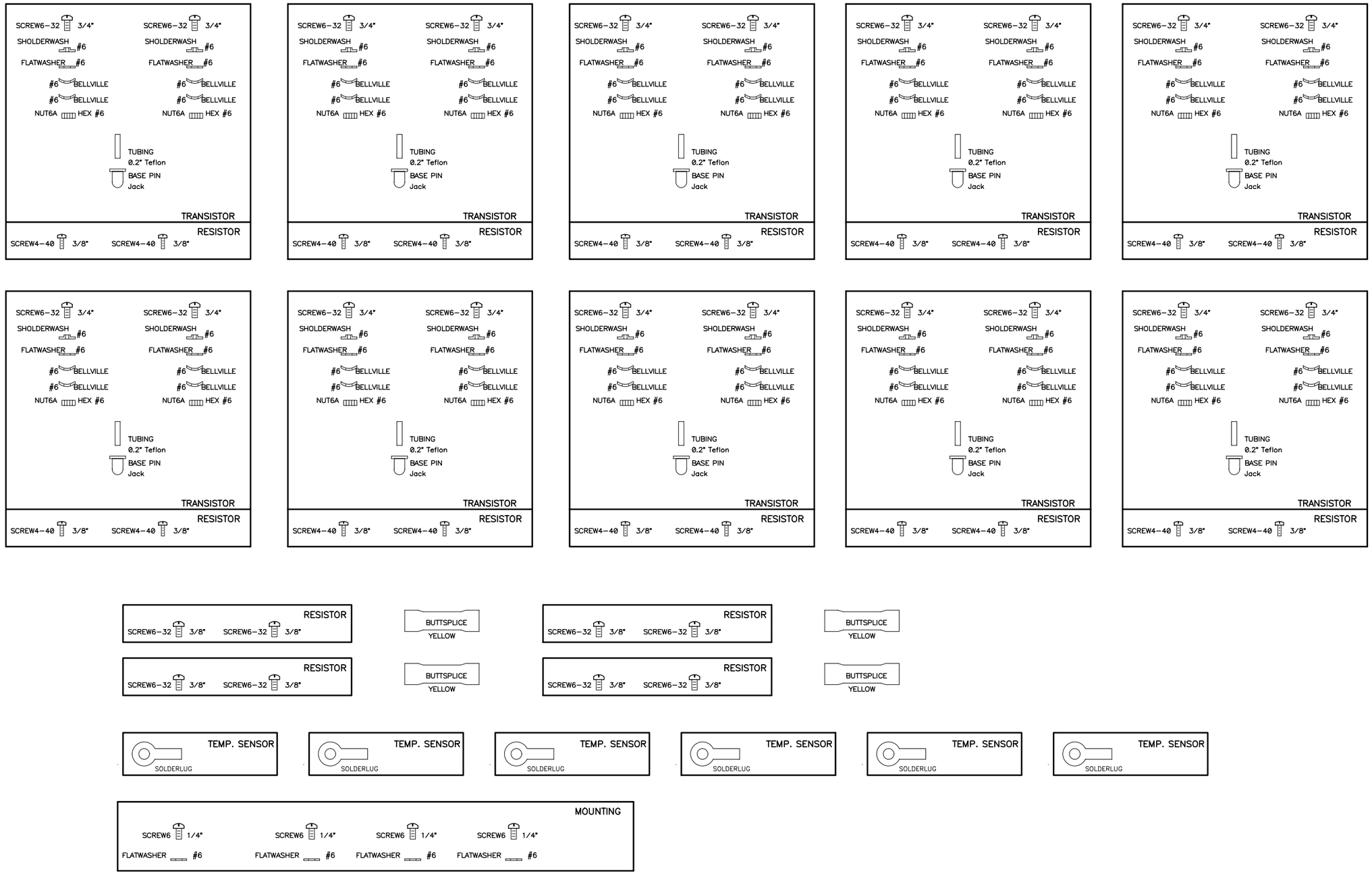

Title	14:48:36 Sat Dec 01 2001 BLS OUTPUT MODULE	
Size D	Number 3740.412 ED 286068	Rev Rev G
Date 5/30/97		David L. Huffman
Filename BLSOUTMKII.SCH		Sheet 2 of 3

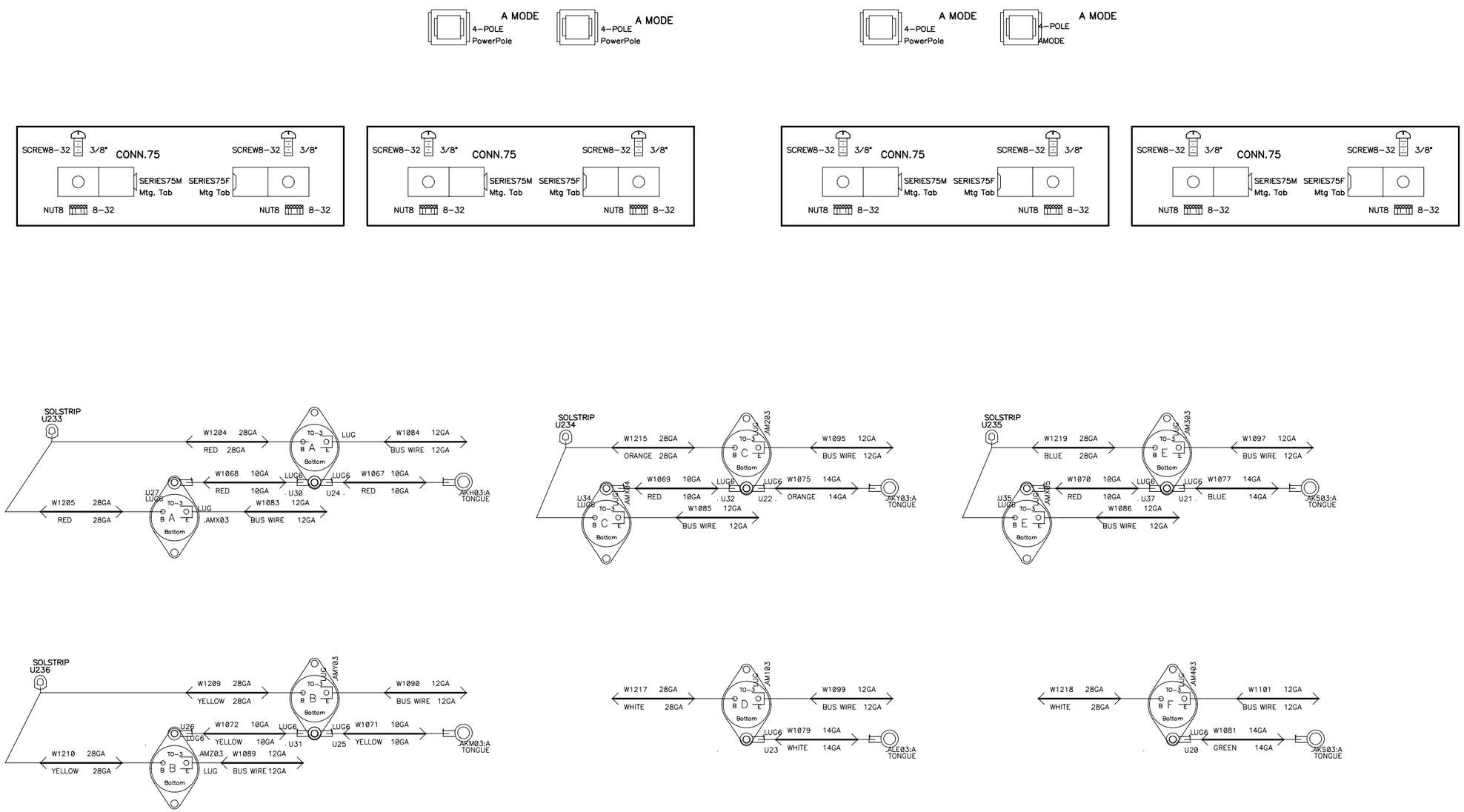

Title	14:48:43 Sat Dec 01 2001 BLS OUTPUT MODULE	
Size D	Number 3740.412 ED 286068	Rev Rev G
Date 5/30/97		David L. Huffman
Filename BLSOUTMKII.SCH		Sheet 3 of 3