Next Page

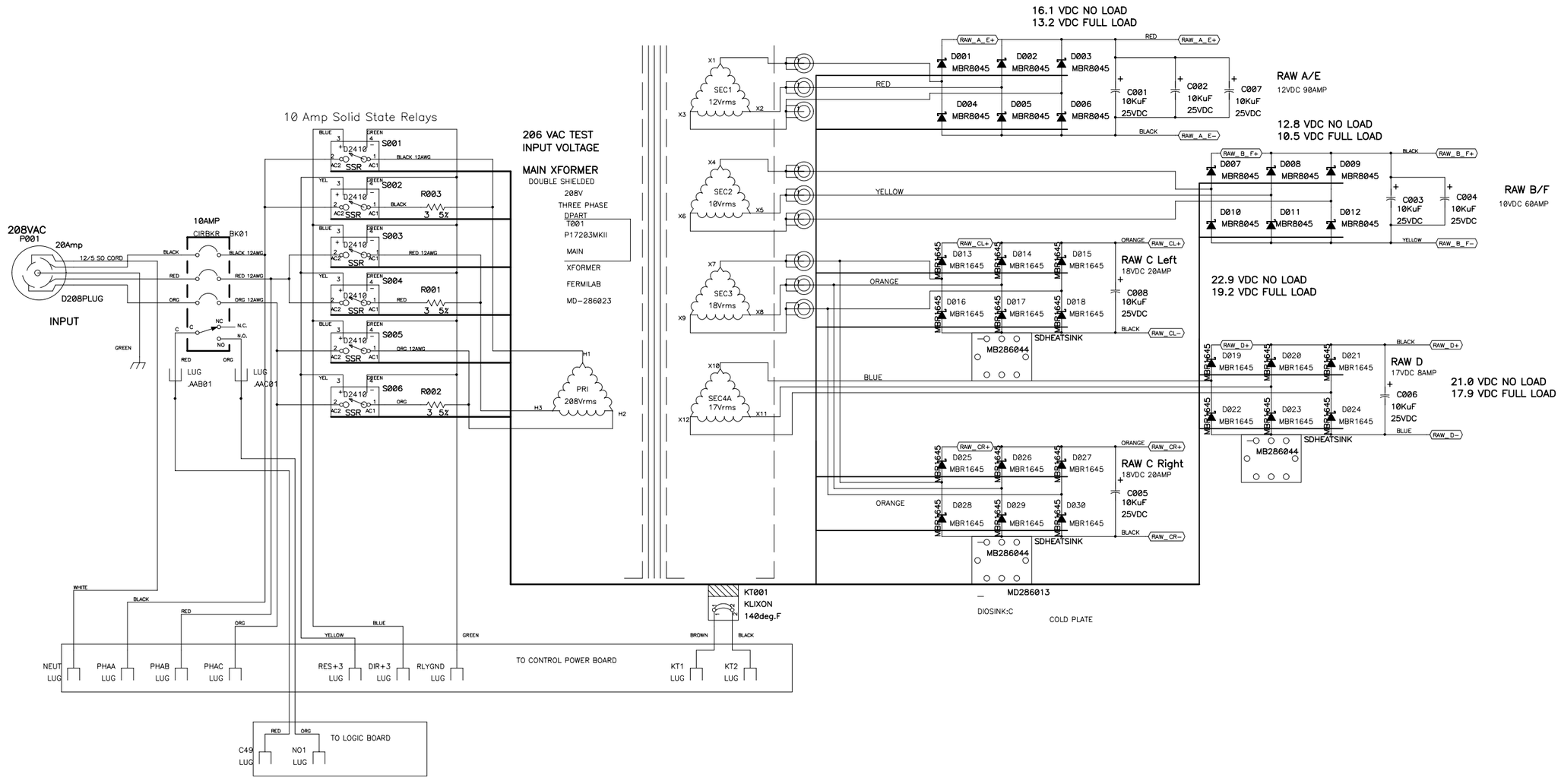

Title	09:21:38 Sun Dec 02 2001 BLS RAW POWER CIRCUIT	
Size D	Number 3740.412-ED-286072a	Rev E
Date Dec. 6, 1999		DAVID L. HUFFMAN
Filename BLSRAWmkii.SCH		Sheet 1 of 4

Next Page

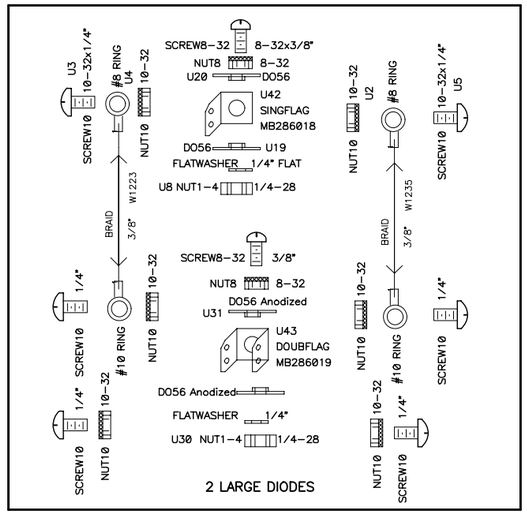

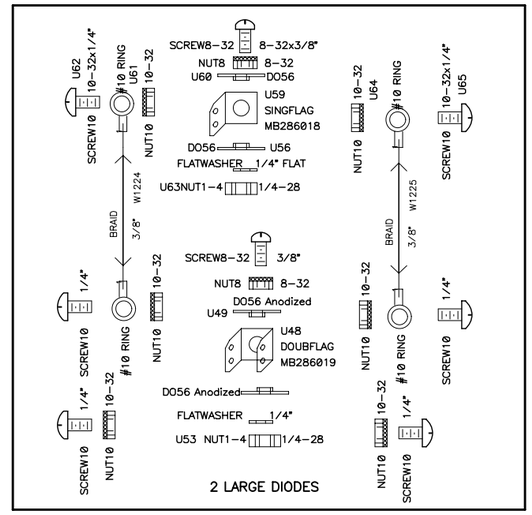

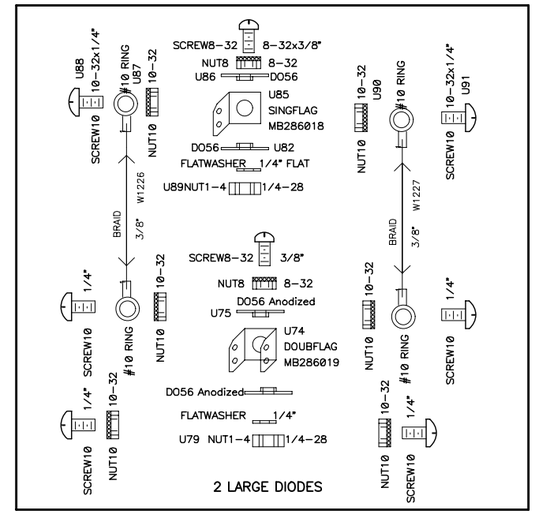

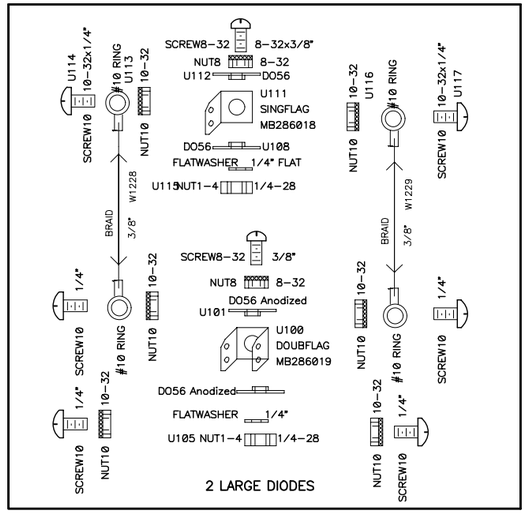

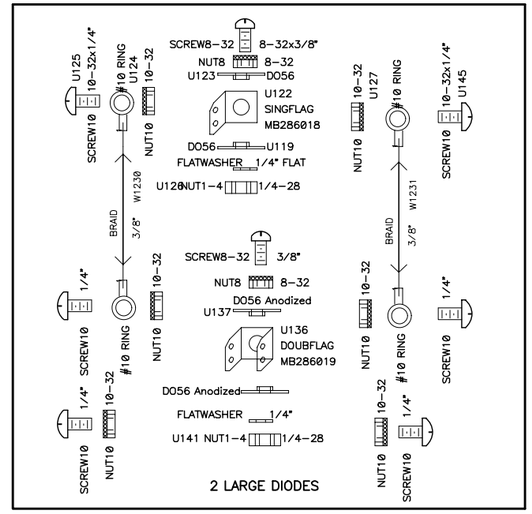

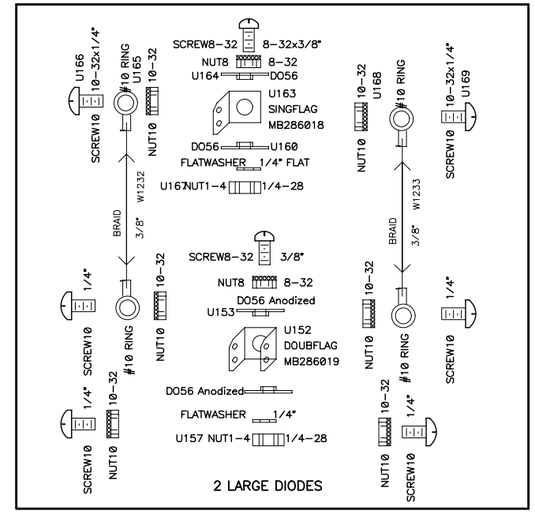

Title	09:18:25 Sun Dec 02 2001 BLS RAW POWER CIRCUIT	
Size D	Number 3740.412-ED-286072a	Rev E
Date Dec. 6, 1999		DAVID L. HUFFMAN
Filename BLSRAWmkii.SCH	Sheet	of 4

Next Page

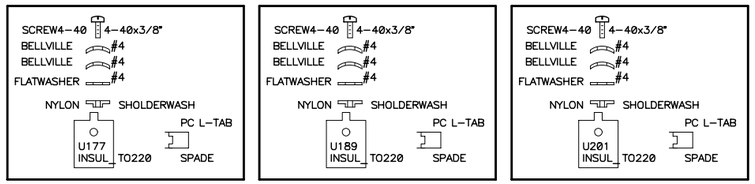

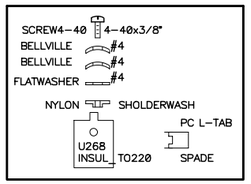

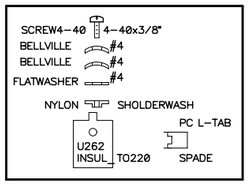

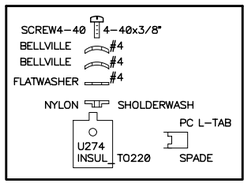

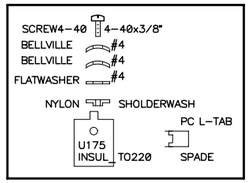

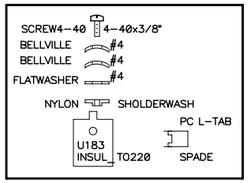

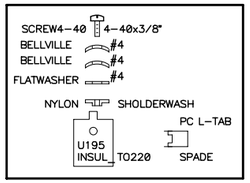

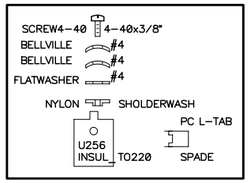

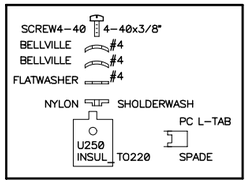

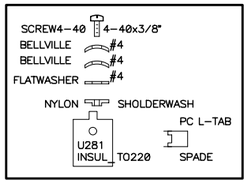

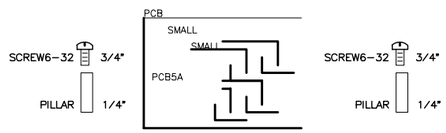

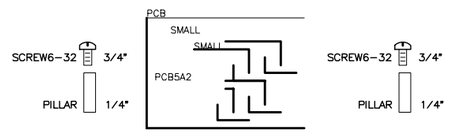

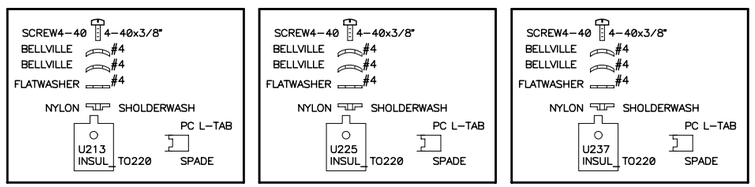

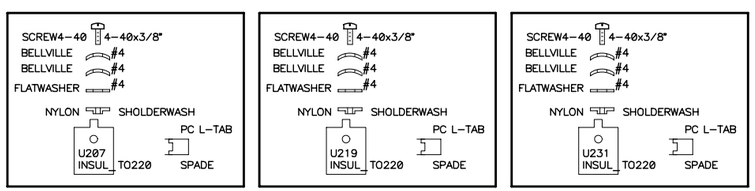

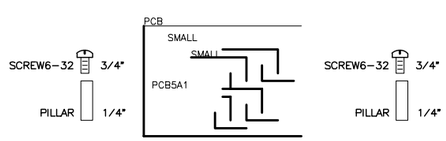

SSR

SCREW6-32 1/4"

SCREW6-32 1/4"

SSR

SCREW6-32 1/4"

SCREW6-32 1/4"

SSR

SCREW6-32 1/4"

SCREW6-32 1/4"

SSR

SCREW6-32 1/4"

SCREW6-32 1/4"

SSR

SCREW6-32 1/4"

SCREW6-32 1/4"

SSR

SCREW6-32 1/4"

SCREW6-32 1/4"

RESISTOR

SCREW4-40 1/4"

SCREW4-40 1/4"

RESISTOR

SCREW4-40 1/4"

SCREW4-40 1/4"

RESISTOR

SCREW4-40 1/4"

SCREW4-40 1/4"

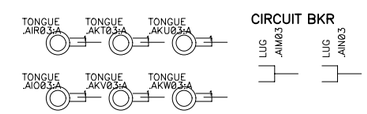

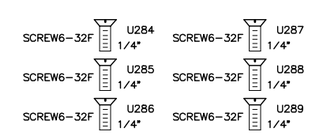

AC LINE CORD STRAIN RELIEF

.AH403:C

Title	09:18:32 Sun Dec 02 2001 BLS RAW POWER CIRCUIT	
Size D	Number 3740.412-ED-286072a	Rev E
Date Dec. 6, 1999	DAVID L. HUFFMAN	
Filename BLSRAWmkii.SCH	Sheet of 4	

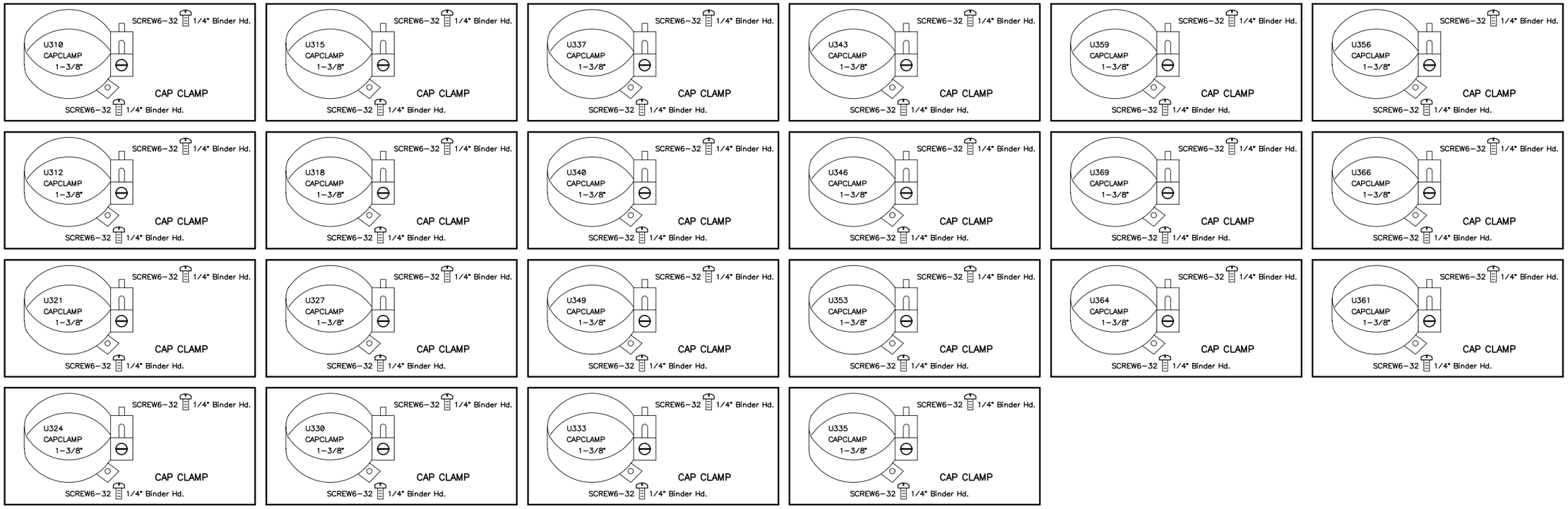

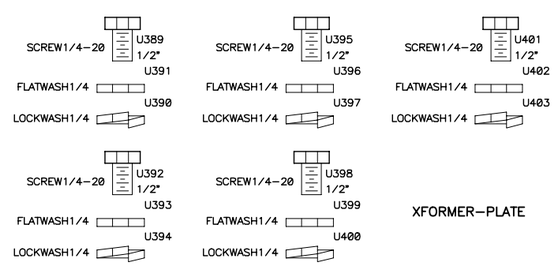

CAP BUS 1		CAP BUS 2	
.AGZ04:C CAP BUS 1	GROUND STRAP	.AG404:C CAP BUS 2	GROUND STRAP
.AG104:C CAP BUS 1	GROUND STRAP	.AG504:C CAP BUS 2	GROUND STRAP
.AG204:C CAP BUS 1	GROUND STRAP	.AG604:C CAP BUS 2	GROUND STRAP
.AG304:C	GROUND STRAP	.AHA04:C	GROUND STRAP

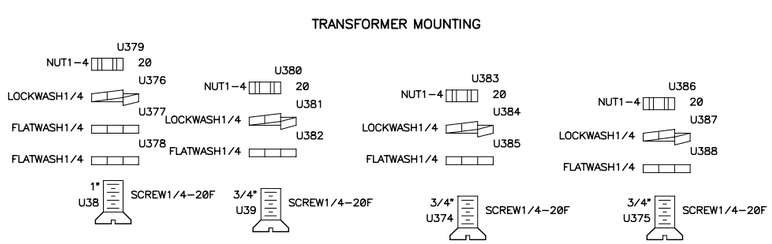

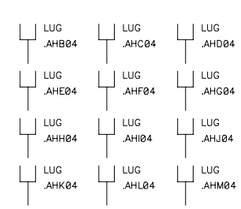

Title	09:18:38 Sun Dec 02 2001 BLS RAW POWER CIRCUIT	
Size D	Number 3740.412-ED-286072a	Rev E
Date Dec. 6, 1999		DAVID L. HUFFMAN
Filename BLSRAWmkii.SCH		Sheet of 4