Next Page

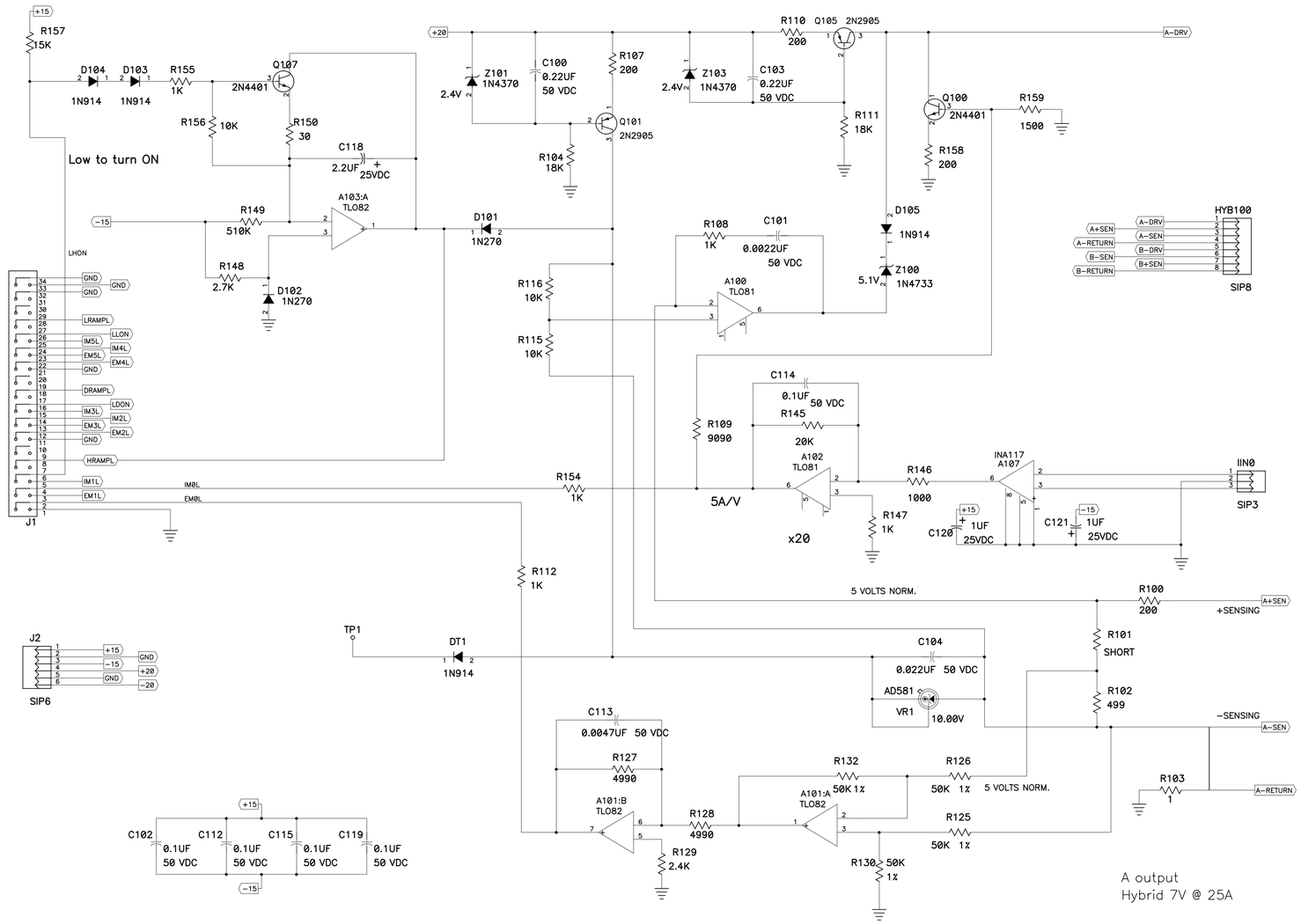

Title	14:17:34 Fri Dec 28 2001 BLS REGULATOR BOARD	
Size D	Number 3740.412-ED-286076	Rev J
Date 11/15/2000	David L. Huffman	
Filename BlsregMKII.sch	Sheet 1 of 6	

Next Page

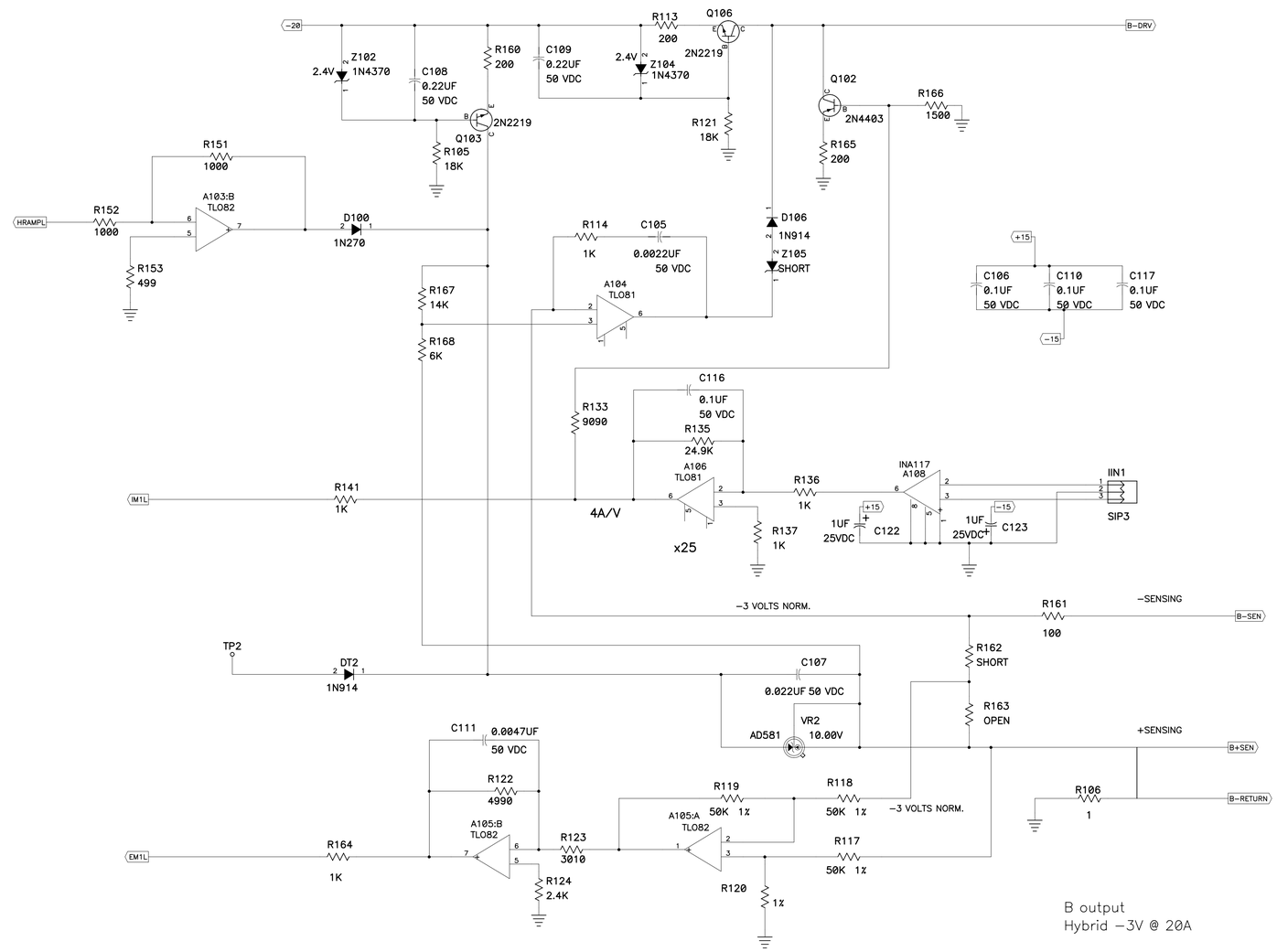

B output
Hybrid -3V @ 20A

Title	14:17:43 Fri Dec 28 2001 BLS REGULATOR BOARD	
Size D	Number 3740.412-ED-286076	Rev J
Date 11/15/2000		David L. Huffman
Filename BlsregMKII.sch		Sheet 2 of 6

Next Page

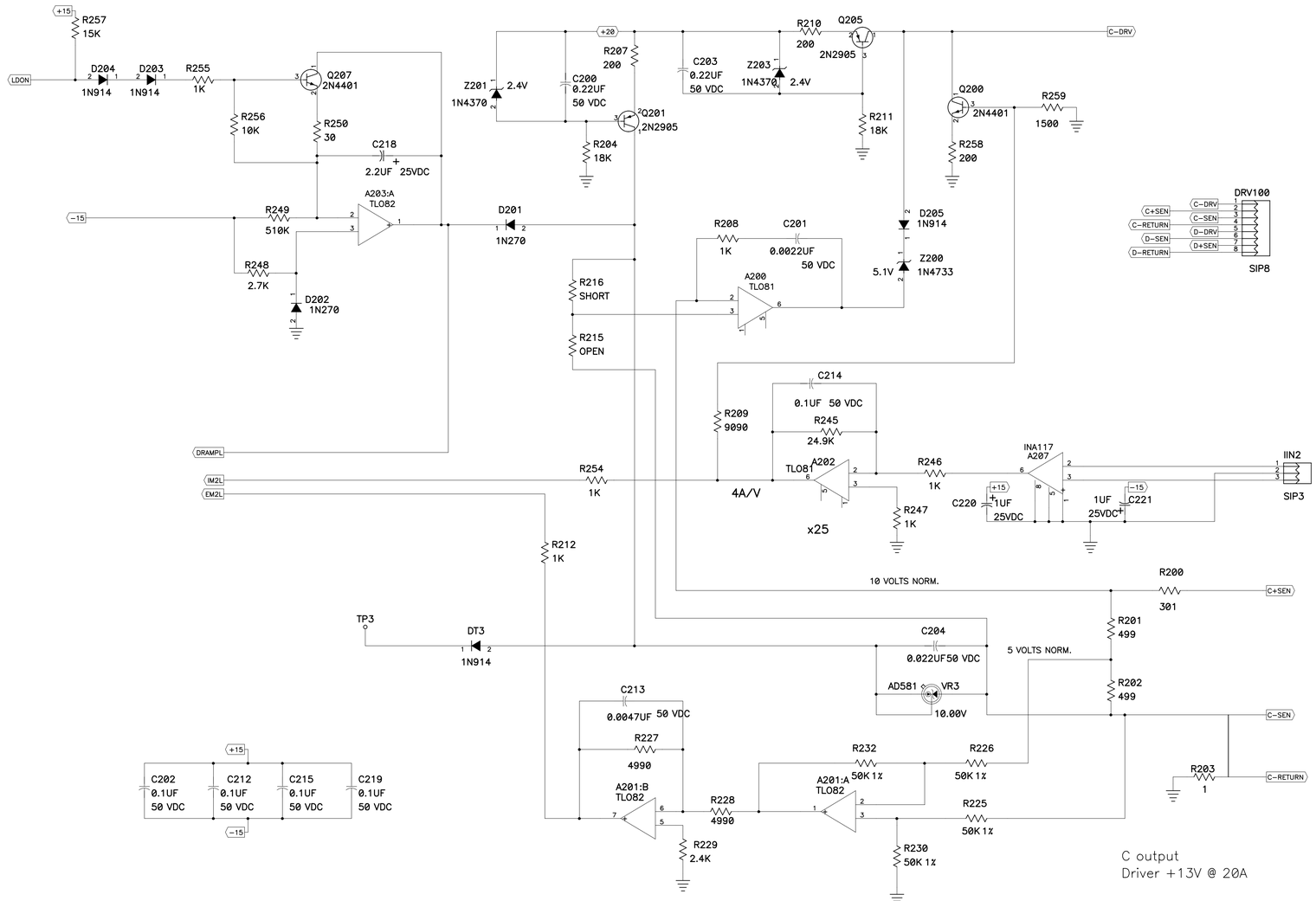

Title	14:17:47 Fri Dec 28 2001 BLS REGULATOR BOARD	
Size D	Number 3740.412-ED-286076	Rev J
Date 11/15/2000	David L. Huffman	
Filename BlsregMKII.sch	Sheet 3 of 6	

Next Page

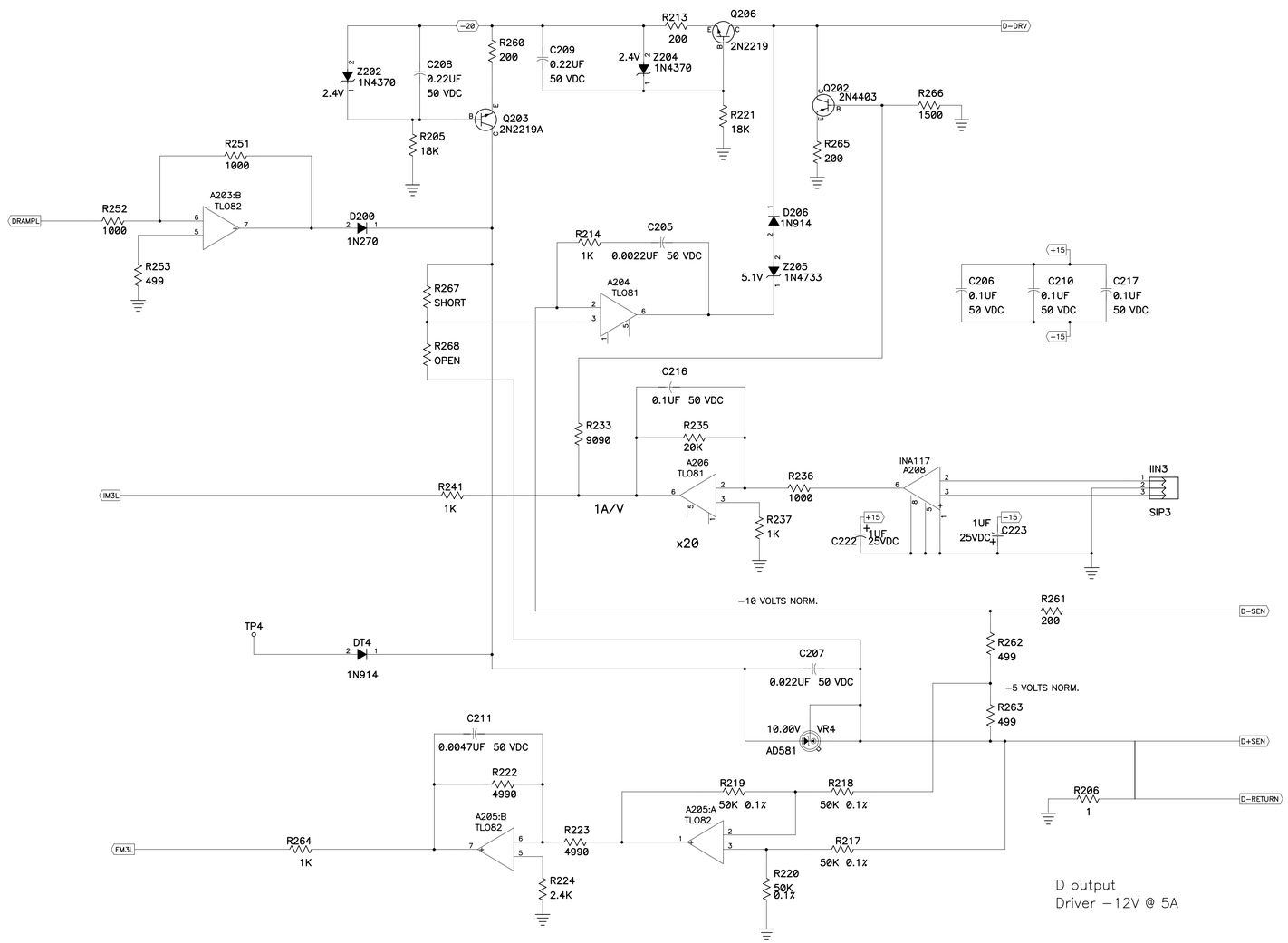

Title	14:17:51 Fri Dec 28 2001 BLS REGULATOR BOARD	
Size D	Number 3740.412-ED-286076	Rev J
Date 11/15/2000	David L. Huffman	
Filename BlsregMKII.sch	Sheet 4 of 6	

Next Page

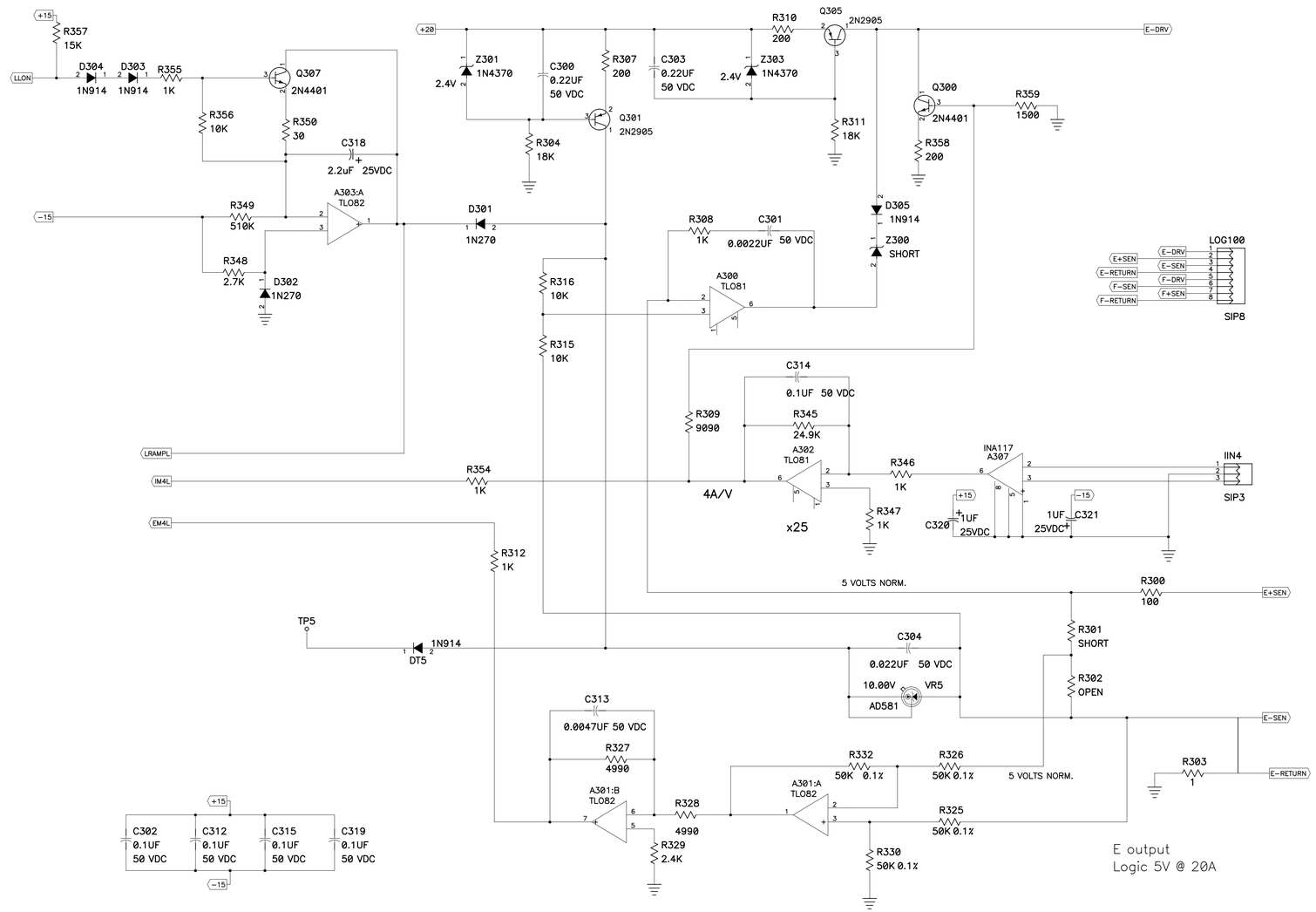

Title	14:17:55 Fri Dec 28 2001 BLS REGULATOR BOARD	
Size D	Number 3740.412-ED-286076	Rev J
Date 11/15/2000		David L. Huffman
Filename BlsregMKII.sch		Sheet 5 of 6

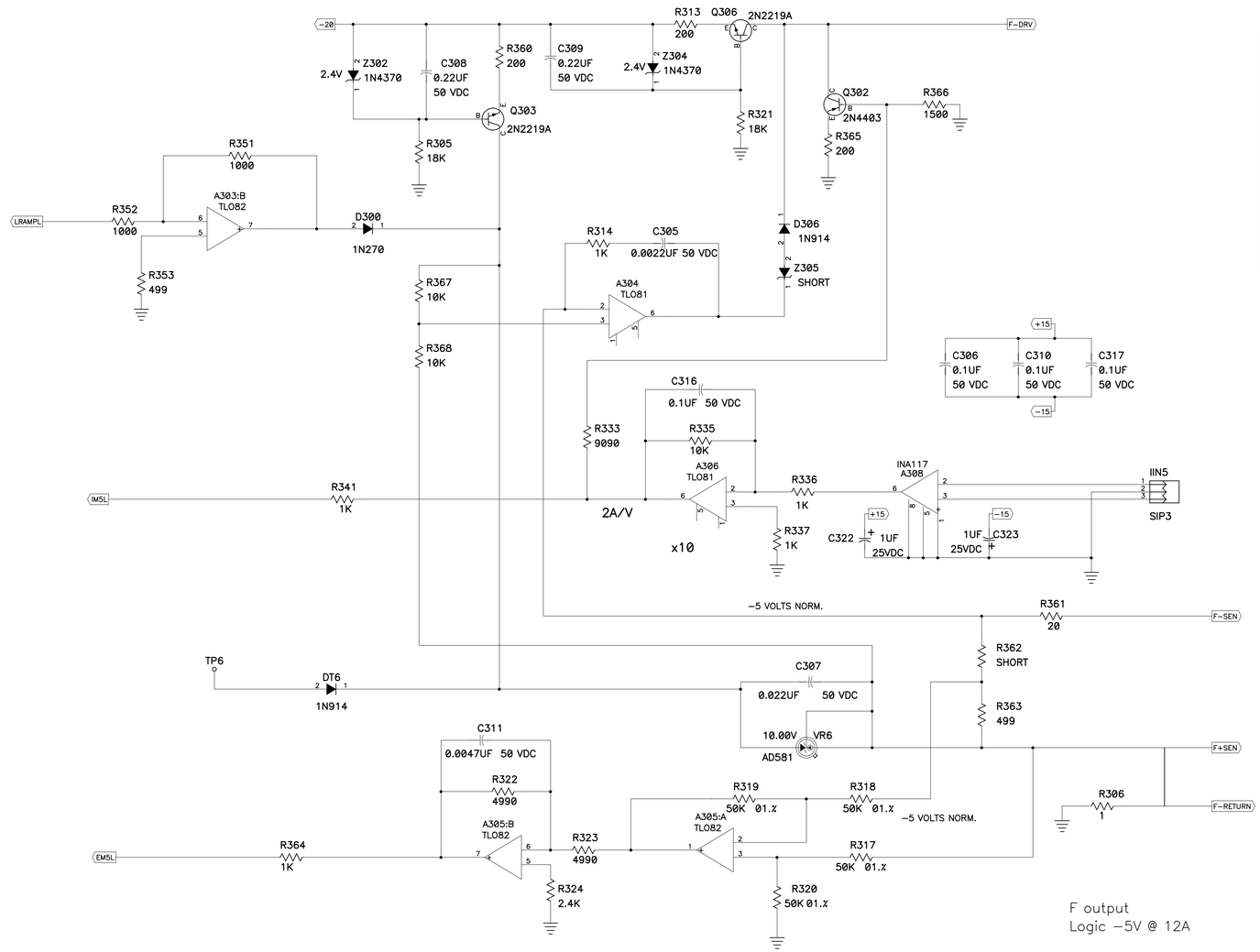

F output
Logic -5V @ 12A

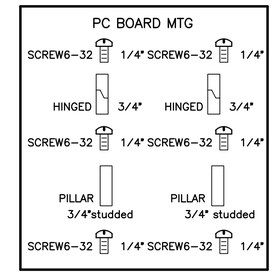

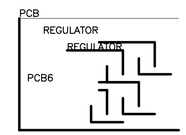

Title	14:18:02 Fri Dec 28 2001 BLS REGULATOR BOARD	
Size D	Number 3740.412-ED-286076	Rev J
Date 11/15/2000	David L. Huffman	
Filename BlsregMKII.sch	Sheet 6 of 6	