Next Page

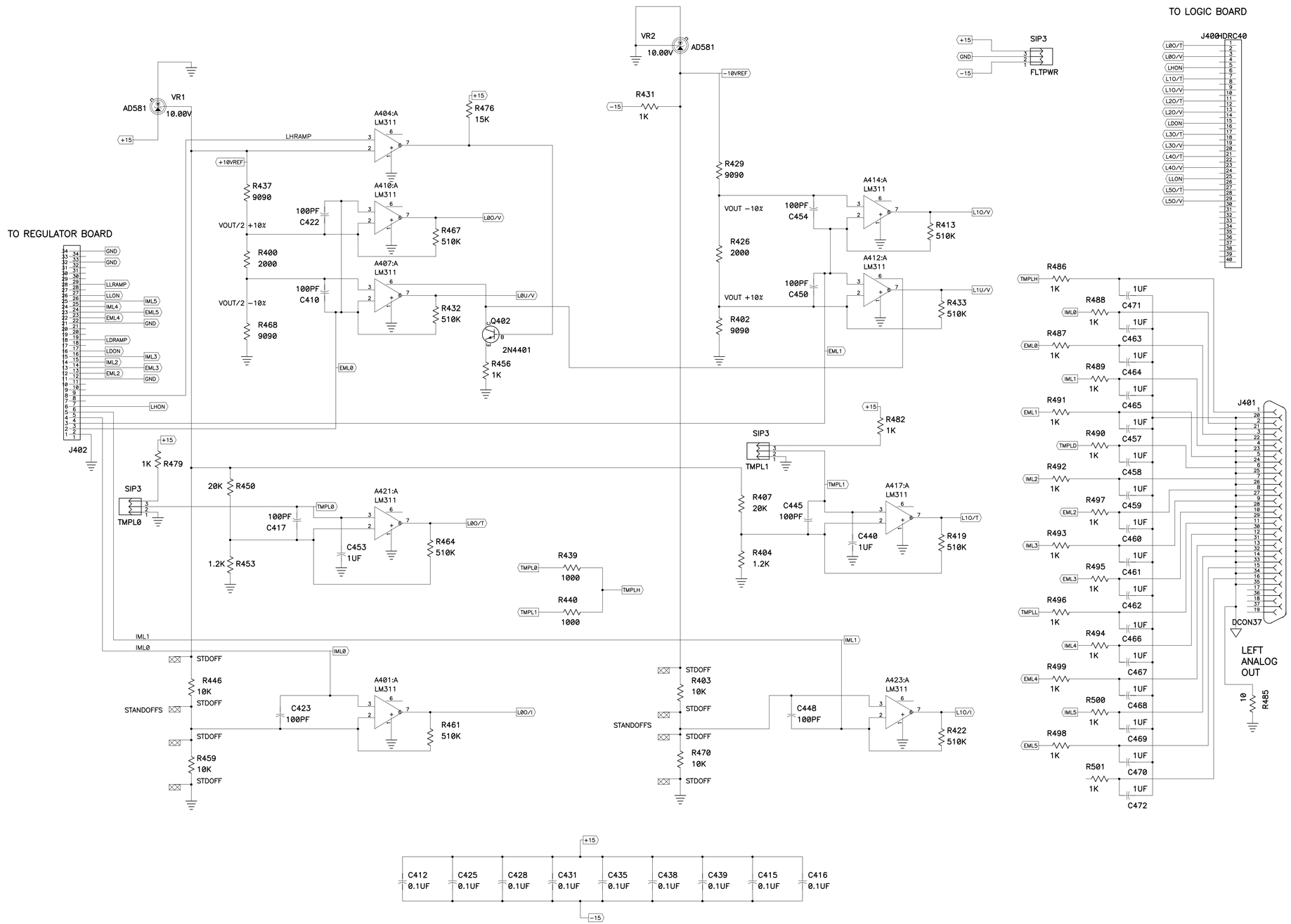

Title	13:27:59 Fri Dec 28 2001 Fault Card	
Size D	Number 3740.412 ED 286082	Rev B
Date June 26, 2000	David Huffman	
Filename Blsflt.sch	Sheet 1 of 4	

Next Page

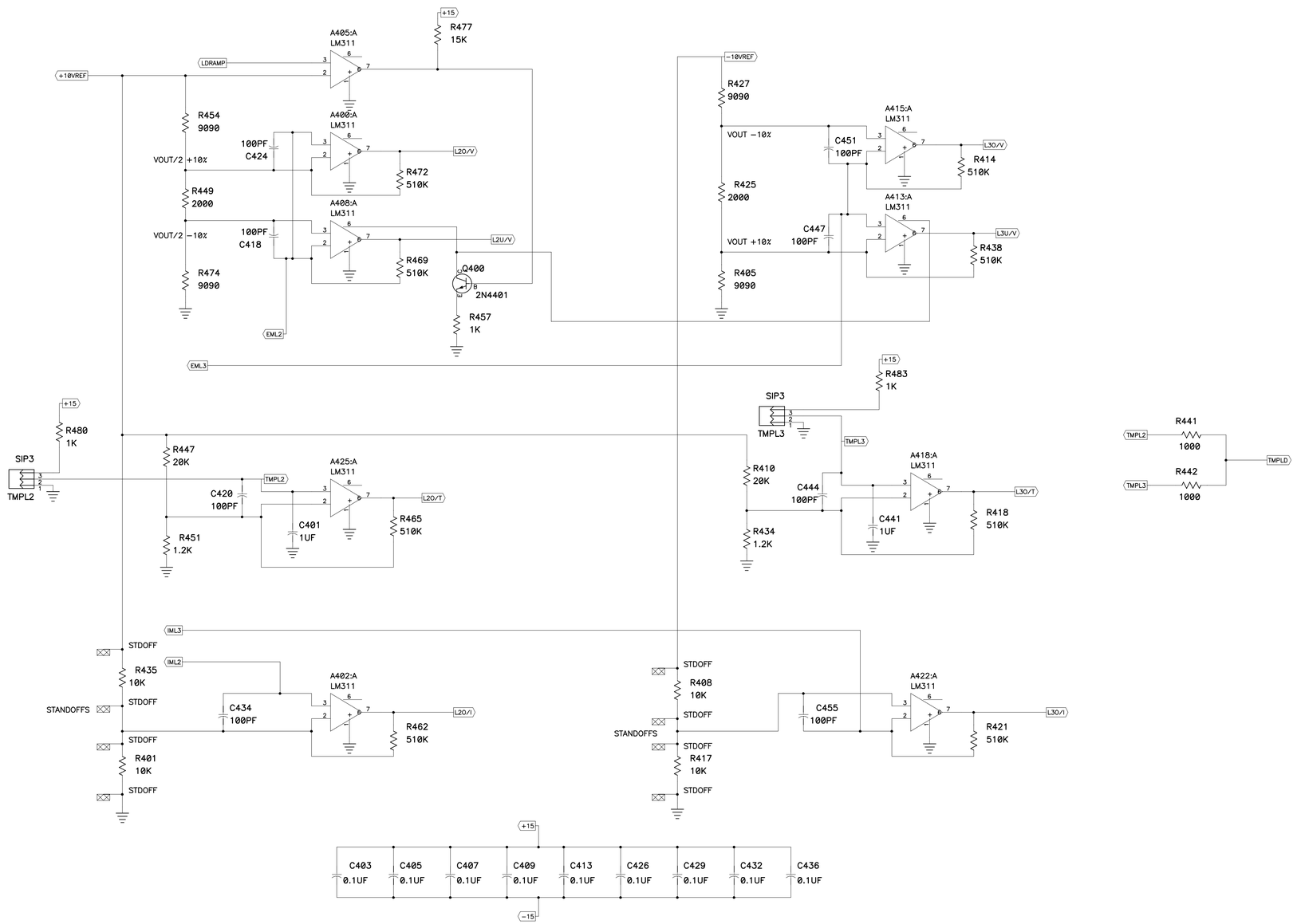

Title	13:28:06 Fri Dec 28 2001 Fault Card	
Size D	Number 3740.412 ED 286082	Rev B
Date June 26, 2000	David Huffman	
Filename Blsflt.sch	Sheet 2 of 4	

Next Page

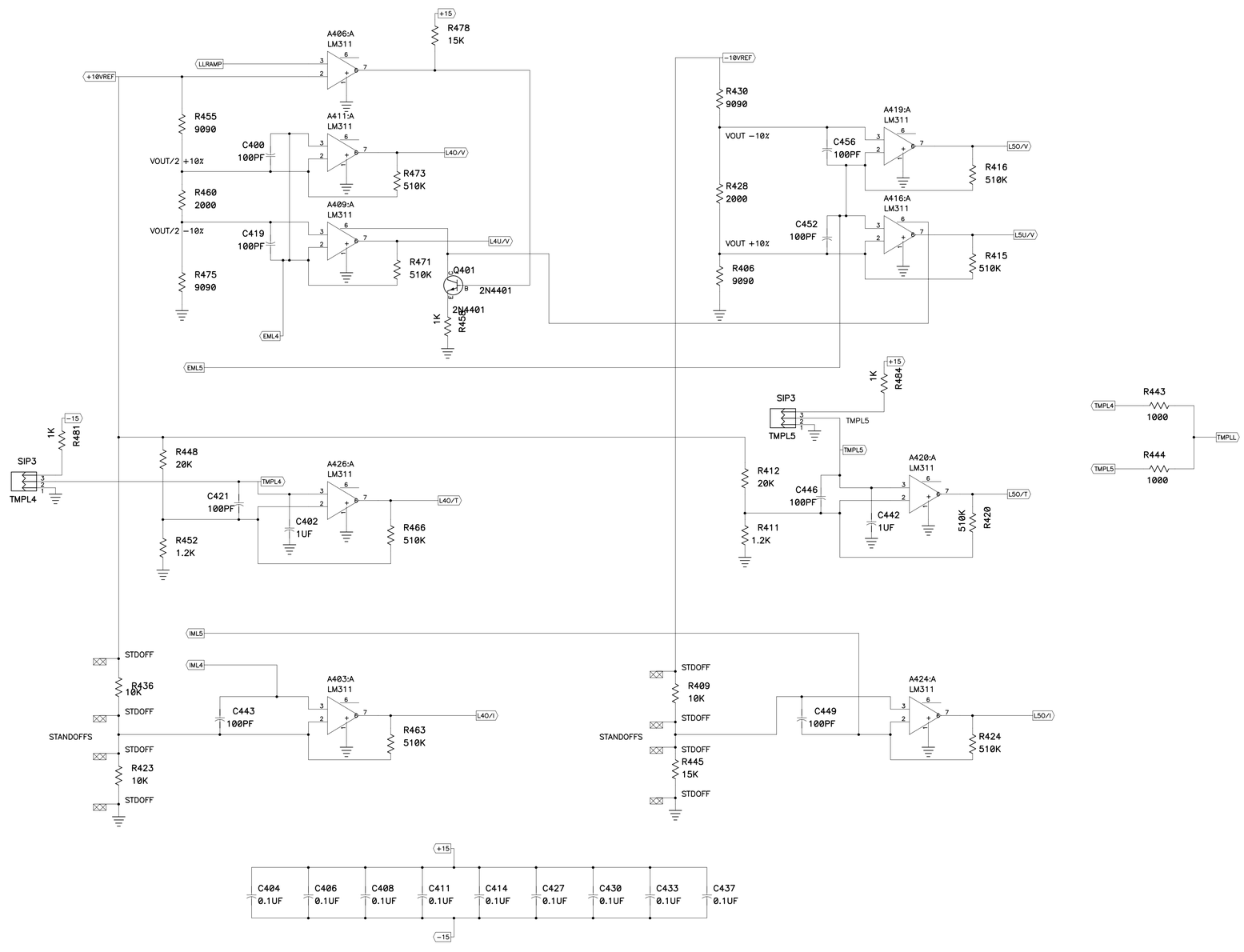

Title	13:28:12 Fri Dec 28 2001 Fault Card	
Size D	Number 3740.412 ED 286082	Rev B
Date June 26, 2000	David Huffman	
Filename Blsflt.sch	Sheet 3 of 4	

'D' CONN. Hardware

SCREW4-40 1/4"
U5
NUT4-40 4-40

SCREW4-40 1/4"
U7
NUT4-40 4-40

PC BOARD Mounting Hardware

SCREW6-32 1/4"
MB286039
BKT1:C
MTG BAR
SCREW6-32 1"

SCREW6-32 1/4"
MB286039
BKT2:C
MTG BAR
SCREW6-32 3/4"

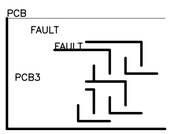

FAULT BOARD TO LOGIC BOARD CABLE

HDRC40 FLT — LOGIC HDRC40

FAULT BOARD TO REGULATOR BOARD CABLE

FAULT — LOGIC1

'D' CONN. Hardware

SCREW4-40 1/4"
U11
NUT4-40 4-40

SCREW4-40 1/4"
U9
NUT4-40 4-40

PC BOARD Mounting Hardware

SCREW6-32 1/4"
MB286039
BKT2:A
MTG BAR
SCREW6-32 1"

SCREW6-32 1/4"
MB286039
BKT2:B
MTG BAR
SCREW6-32 3/4"

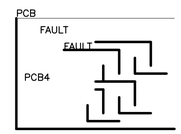

FAULT BOARD TO LOGIC BOARD CABLE

HDRC40 FLT1 — FLT2 HDRC40

FAULT BOARD TO REGULATOR BOARD CABLE

FAULT1 — FAULT2

Title	13:28:18 Fri Dec 28 2001 Fault Card	
Size D	Number 3740.412 ED 286082	Rev B
Date June 26, 2000	David Huffman	
Filename Blsflt.sch	Sheet 4 of 4	