CMS Status and the US-CMS DAQ projects

Ichiro Suzuki
Fermi National Accelerator Laboratory

KEK Seminar, 2003/03/24

Contents

- What am I talking about?
  → Introduction
- What are we going to do?
  → Physics topics
- What tools do we have?
  → Detector components
- Can we build it?
  → US-CMS slice test

Large Hadron Collider

- A machine for Higgs and beyond

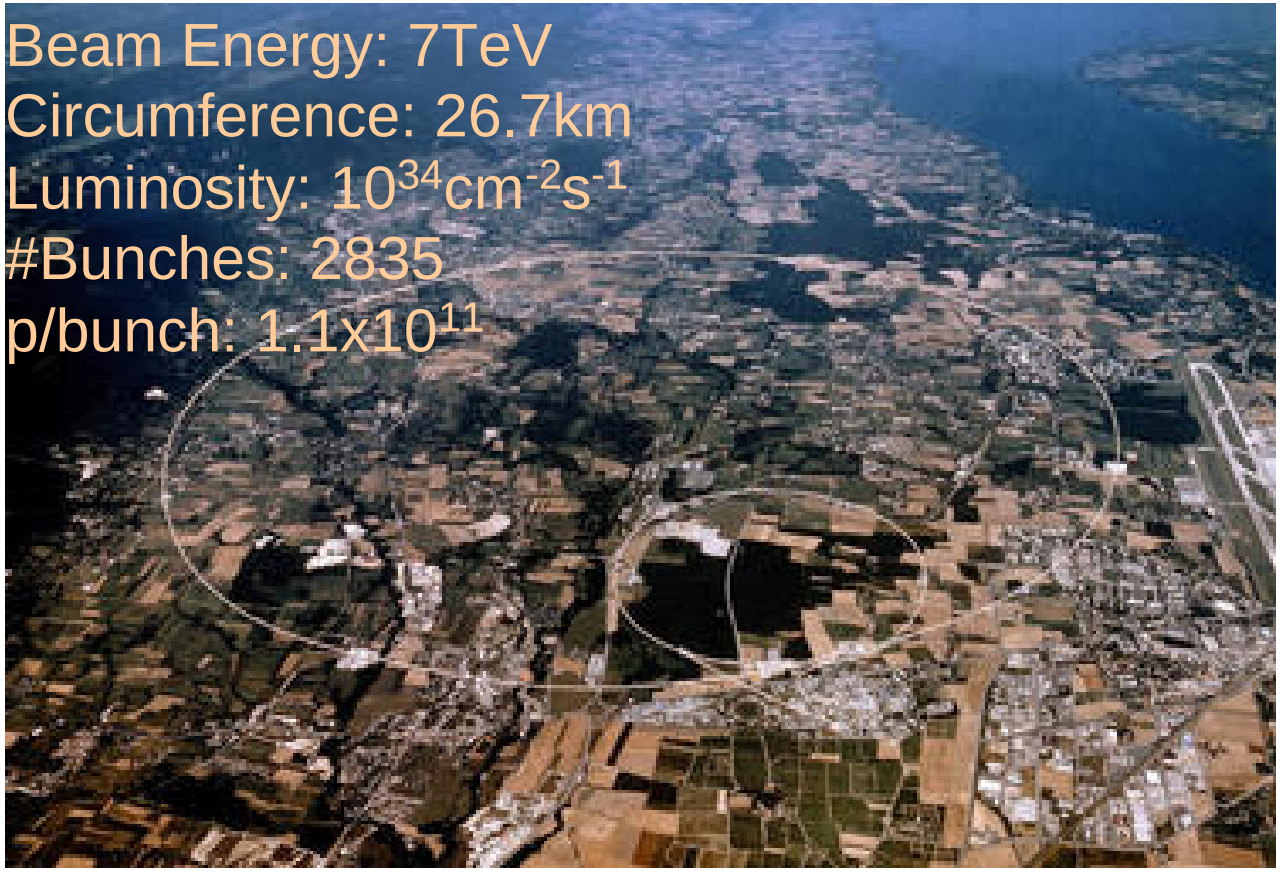

Physics Events at the LHC

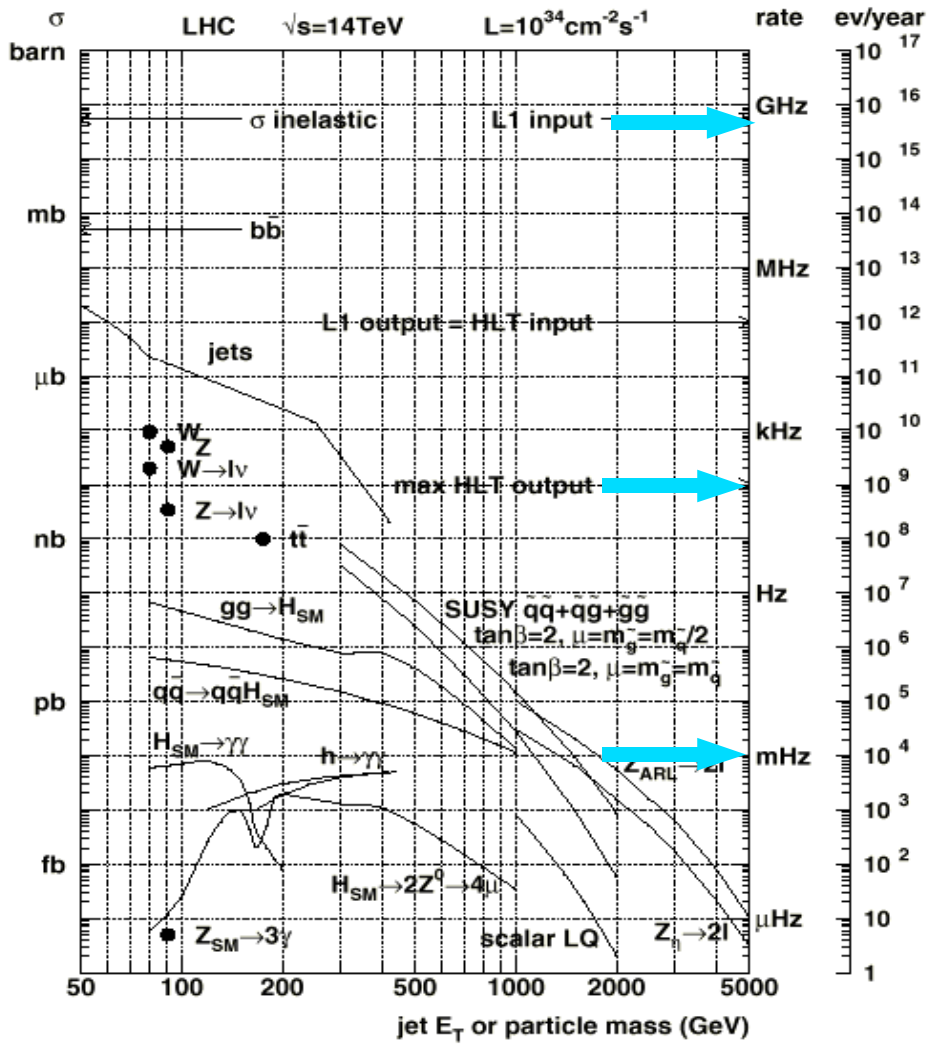

- Min. bias:
  40MHz * 20
- Rate to storage:
  100Hz
  10-7 reduction
- Target physics
  few Hz - mHz
  10-9 ~ 10-12
  reduction

Compact Muon Solenoid

- One of four experiments at LHC
  (Others are ATLAS, ALICE and LHC-B)
- 36 nations, 159 institutions, 1940 scientists
- Detector design goals
  - Good muon system ($H \rightarrow ll$, $ll\nu\nu$, $llll$)
  - Best possible ECAL ($H \rightarrow \gamma\gamma$)
  - High quality central tracker
  - Affordable
- 1992: LoI
  1994: Technical Proposal
  ...
  2007: Physics!

Compact Muon Solenoid (cont'd)

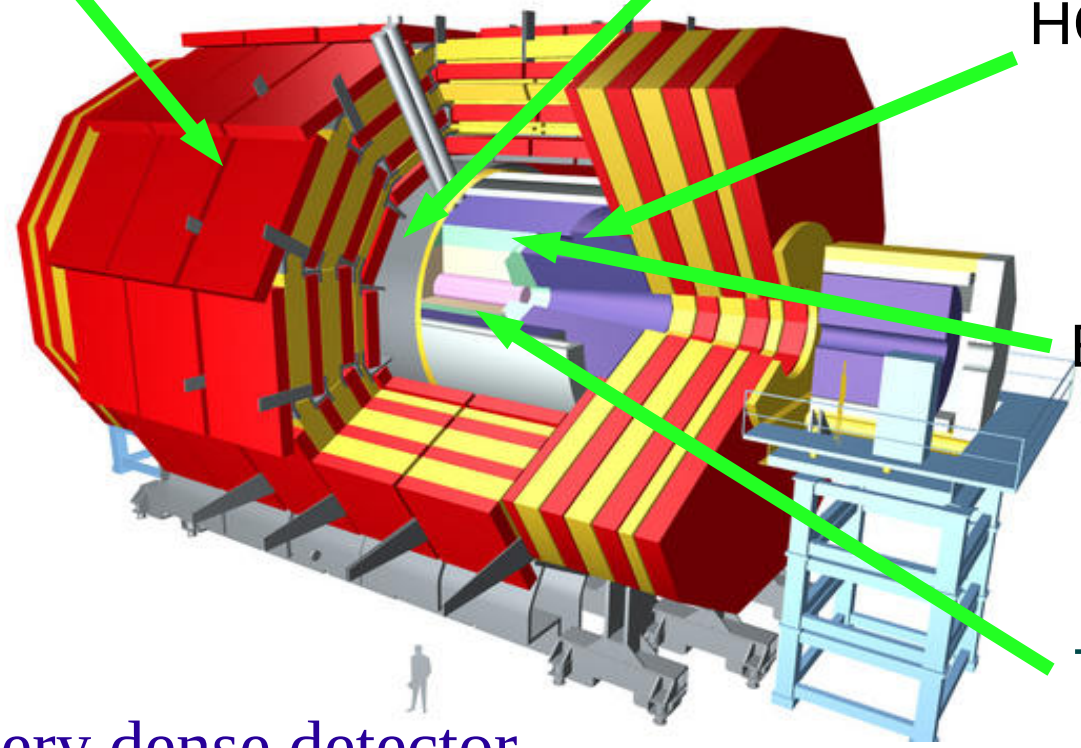

- Very dense detector
  (twice heavier than ATLAS in 1/8 volume)

Physics Topics at CMS

- Standard Model
  - Higgs search
  - Higgs measurements
- SUSY
  - Higgs search
  - Gluinos, squaks search
  - SUSY parameter measurement
- Beyond SM
  - New resonances, Compositeness, Extra Dimensions, ...
- Heavy Ion - QGP

SM Higgs - Production

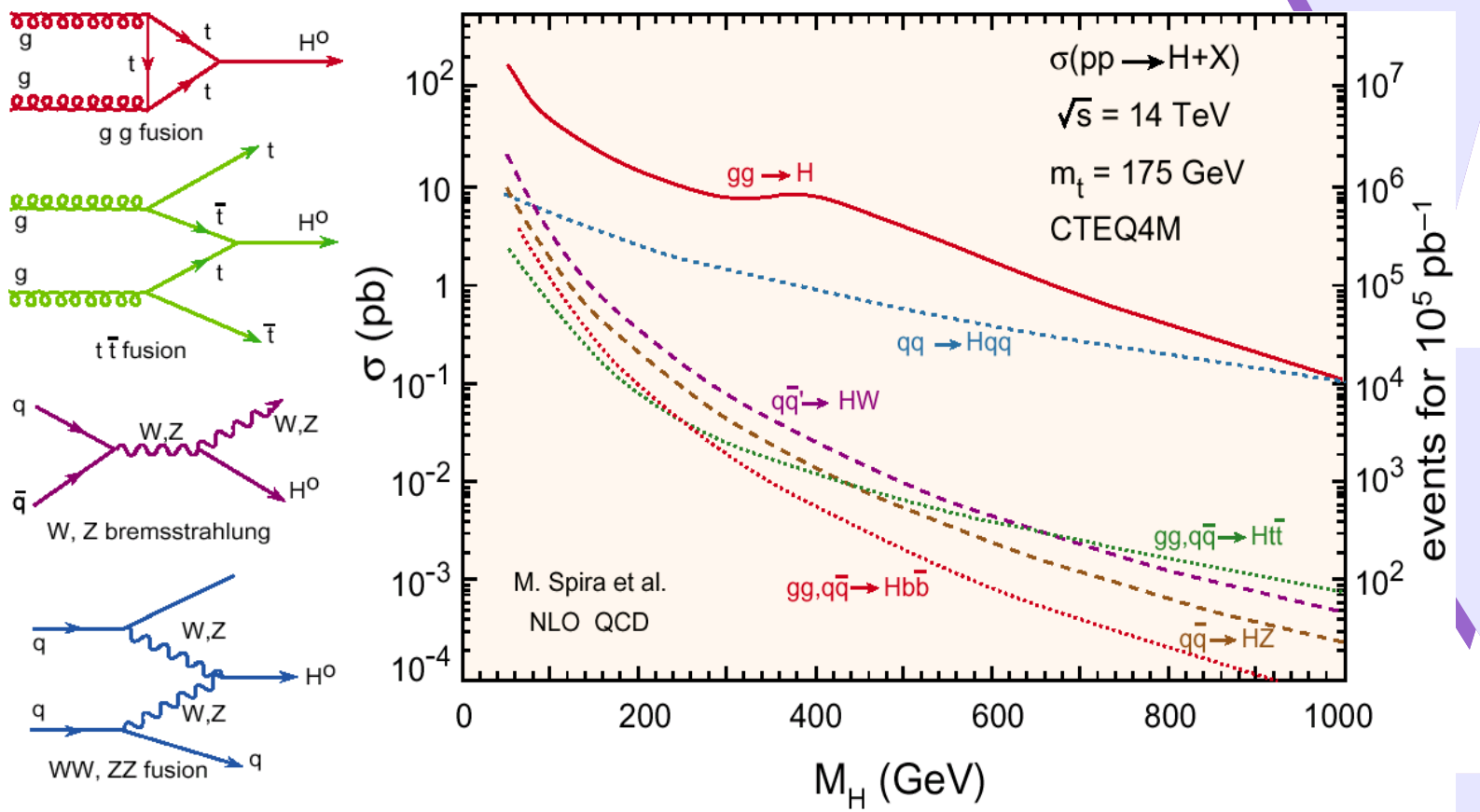

- We have 100k Higgs in a year at L = 10^{34}.

SM Higgs - Decay

- low mass: $M_H < 2M_W$

  $H \rightarrow \gamma\gamma$,

  qqH , $H \rightarrow WW \rightarrow jjll\nu\nu$
- high mass: $M_H > 2M_Z$

  $H \rightarrow ZZ \rightarrow llll$, $lljj$
- $MH \sim 2Mw$

  $H \rightarrow WW \rightarrow ll\nu\nu$

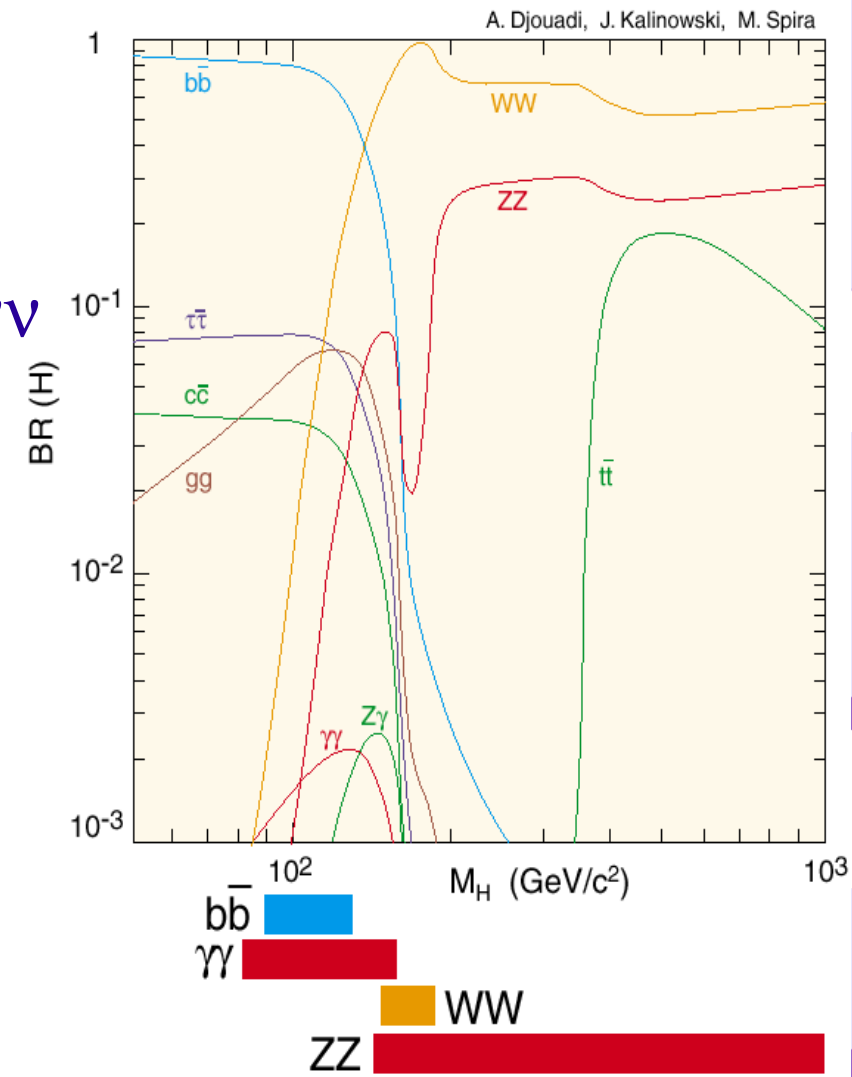

SM Higgs - Discovery with 30fb^{-1}

- qqH, H → WW* → llνν for M_H > 115 GeV

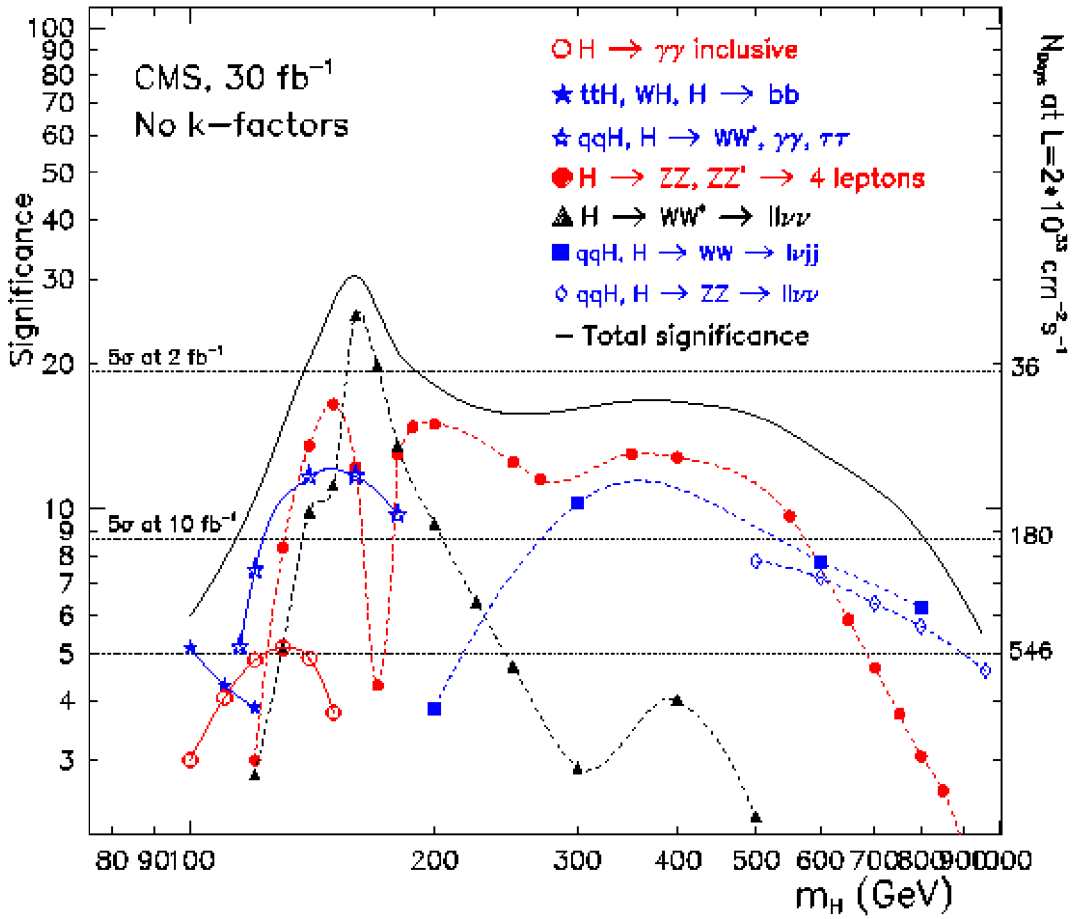

SM Higgs - Properties

- Mass
  - $H \rightarrow \gamma\gamma$ or, $H \rightarrow 4l$
  - resolution: 1.0 - 1.5GeV
- Width
  - $H \rightarrow ZZ \rightarrow 4l$
  - $M_H > 200GeV$
  - Luminosity uncertainty limits the resolution
- Couplings
  - $H\gamma\gamma$, $H\tau\tau$, ...
  - 10% accuracy with 200fb-1

SUSY Higgs

- light MSSM Higgs

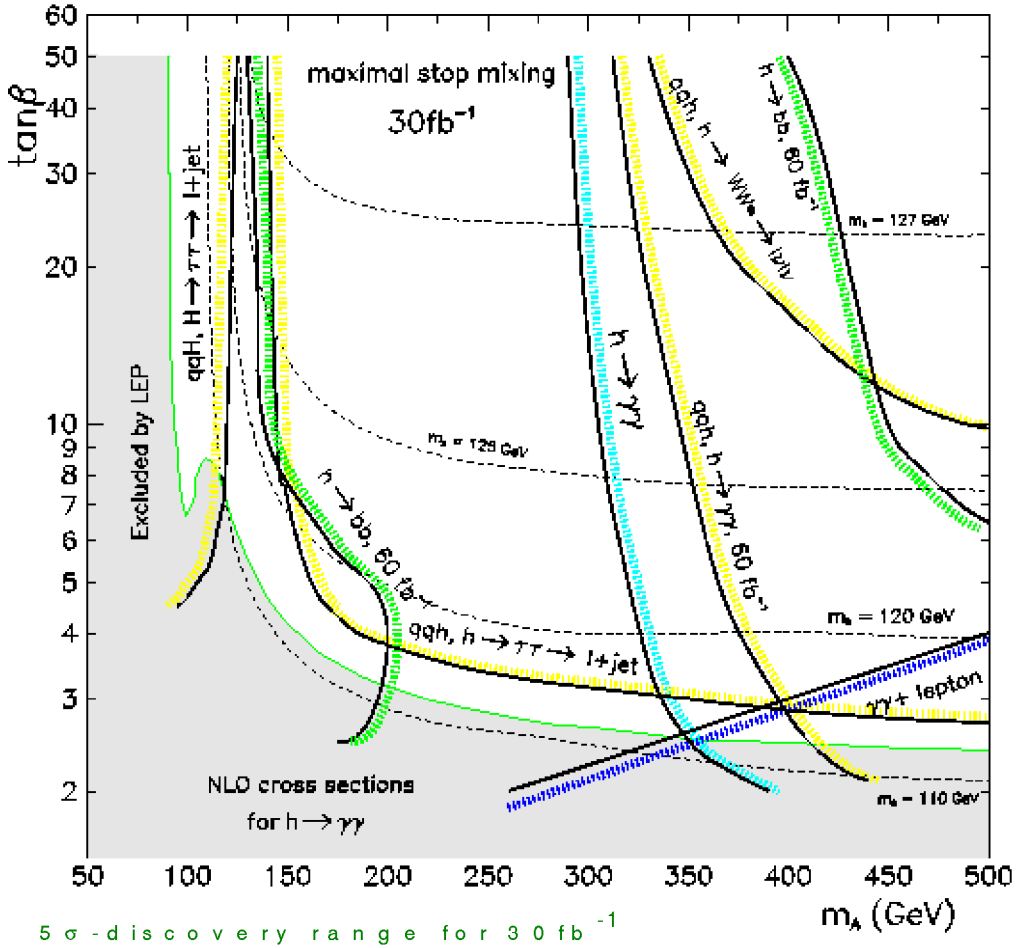

5σ-discovery range for 30 fb^{-1}

SUSY Particles

- squakes, gluinos

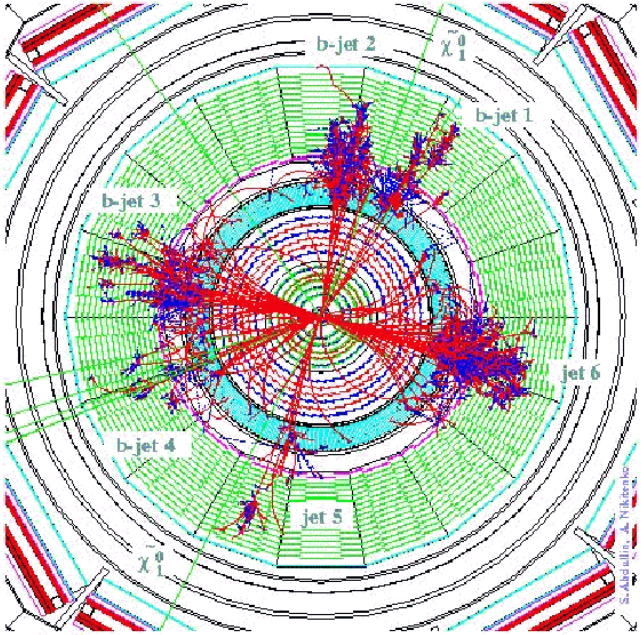

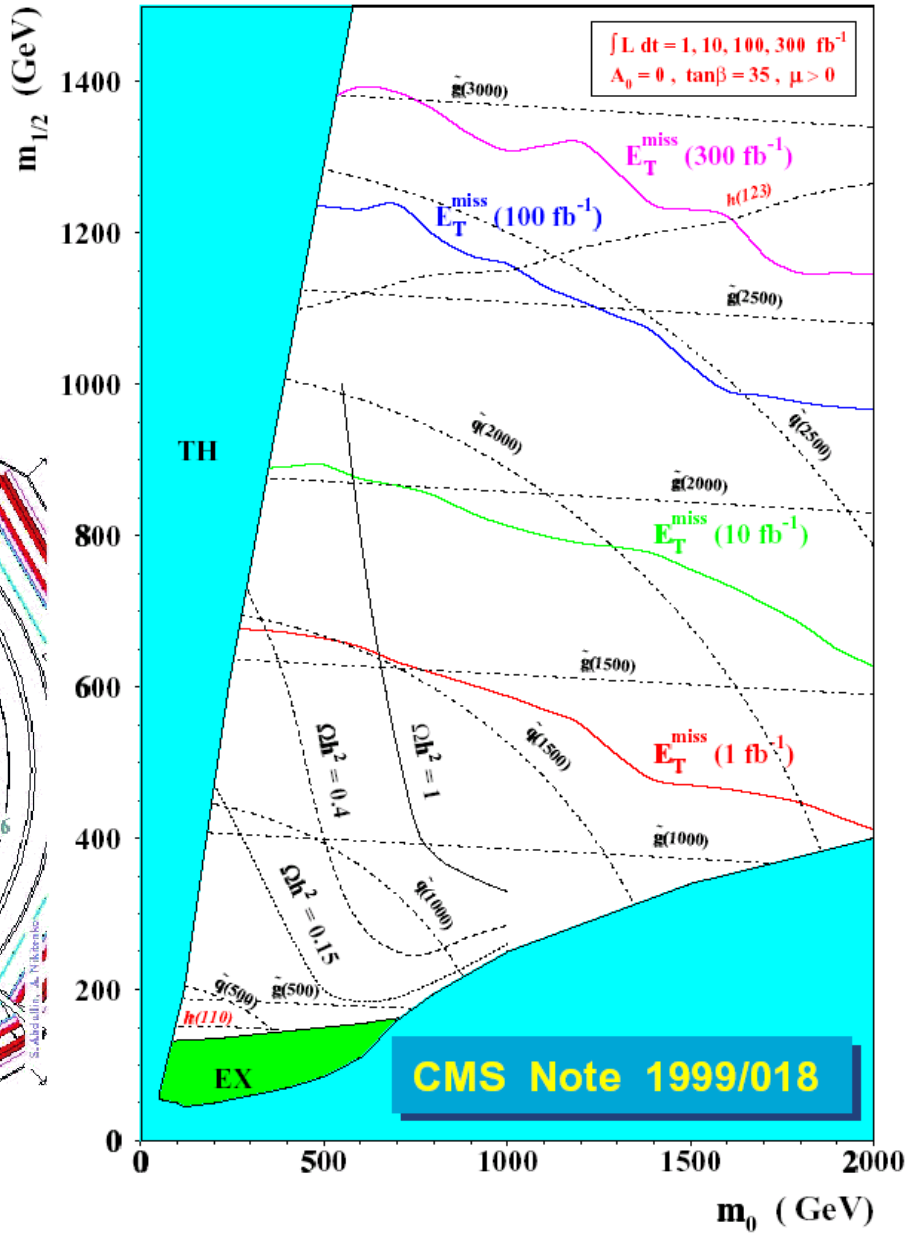

Extra Dimensions

- Signature is model dependent
  - Etmiss + jet (Giudice, Ratazzi, Wells)

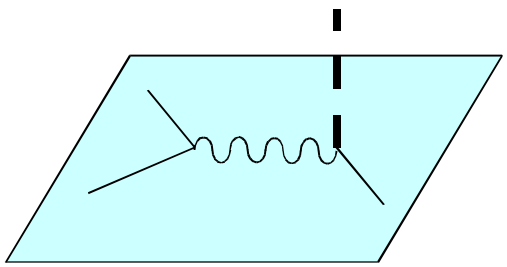

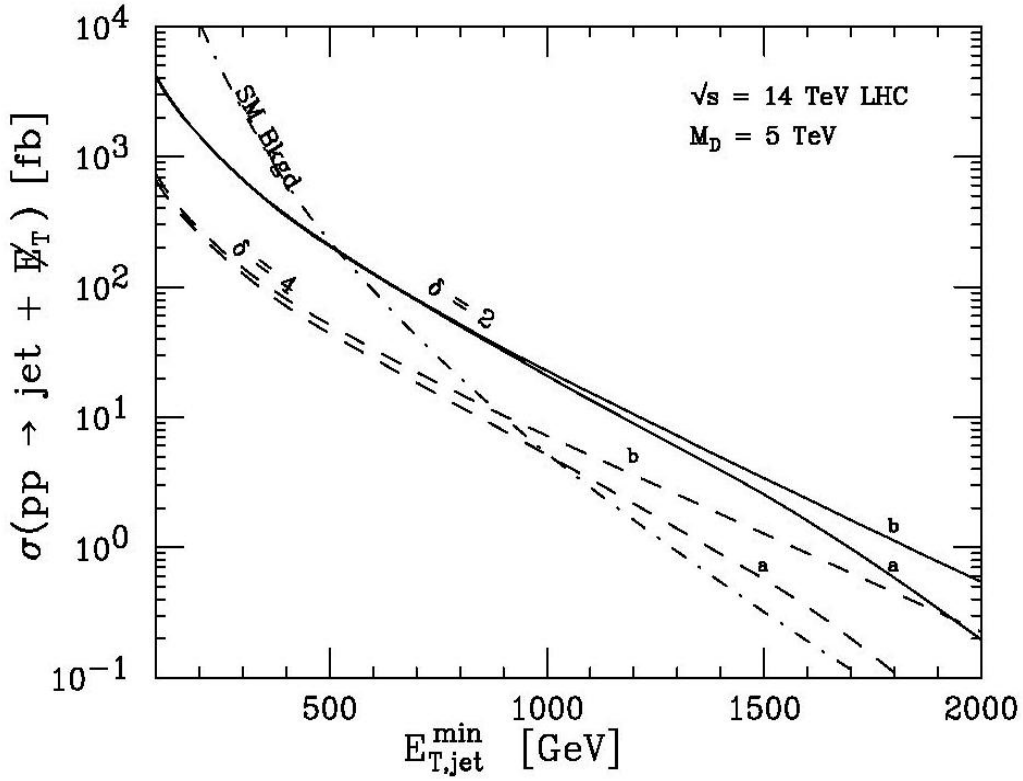

Extra Dimensions (cont'd)

- Background reduction is important

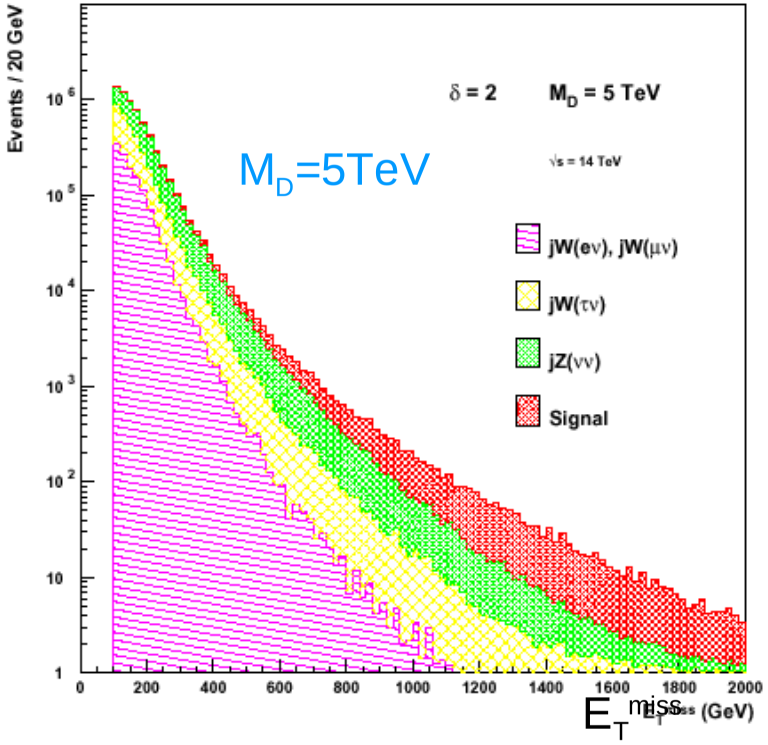

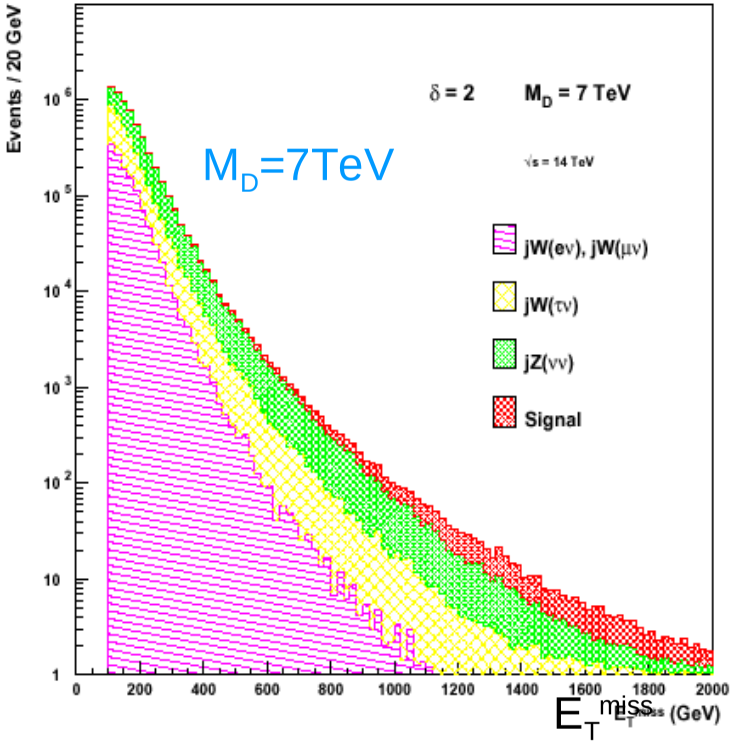

Heavy Ion Program

- Continuation from RHIC experiments
- Higher energy gives new window to the QGP study
  - low event rate: L1 ~ 1kHz
  - high charged particle multiplicity: $dN/d\eta \sim 3000 - 8000$
- CMS detector works for AA or pA without modifications
  - High resolution/granularity calorimeters
  - Good hermeticity ($|\eta|<5$ for HCAL, $|\eta|<2.4$ for MU)
- Additional sub-detectors
  - CASTOR (very forward calorimeter)
  - ZDC (zero degree calorimeter)
- Studies on detector/trigger are going on.

Heavy Ion Program (cont'd)

- High Pt Particles

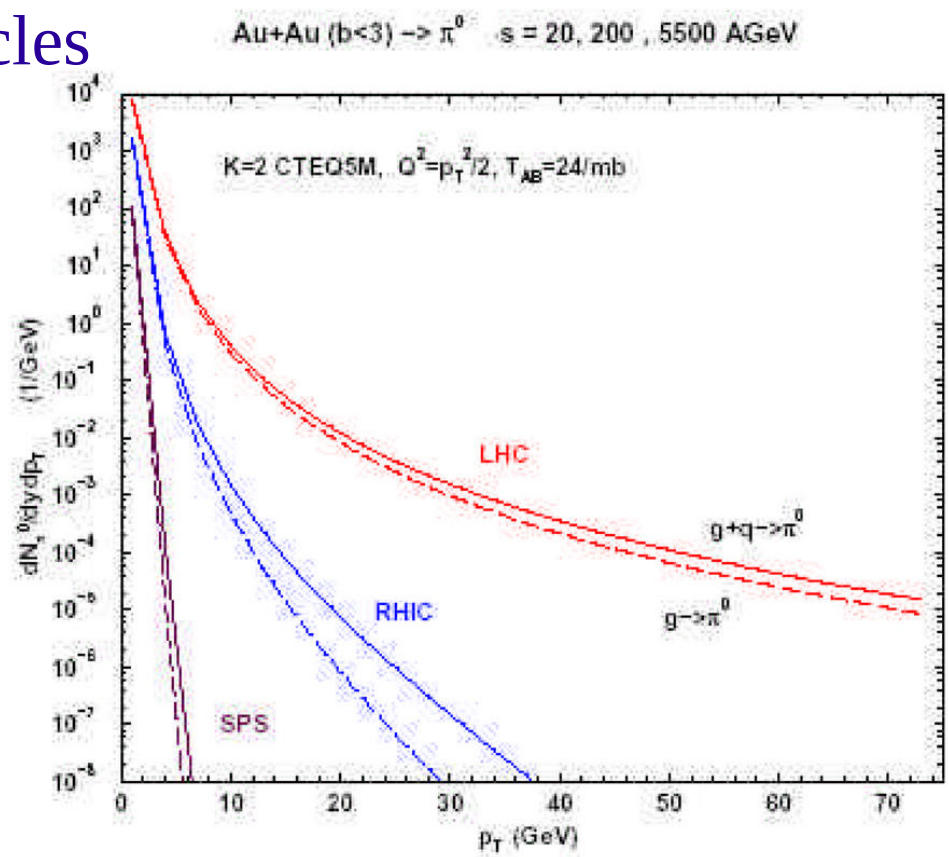

RHIC high

At ha pa he

- Topics: Jet quenching, Back-to-back jet disappearance, Surface emission of high Pt particles ...

Heavy Ion Program (cont'd)

- Quark energy loss

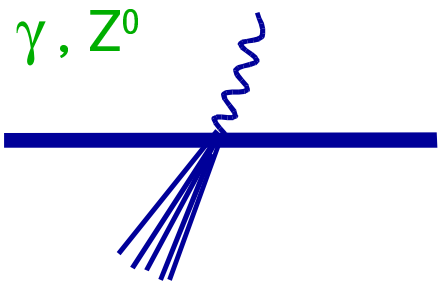

Et > 210GeV
in the barrel

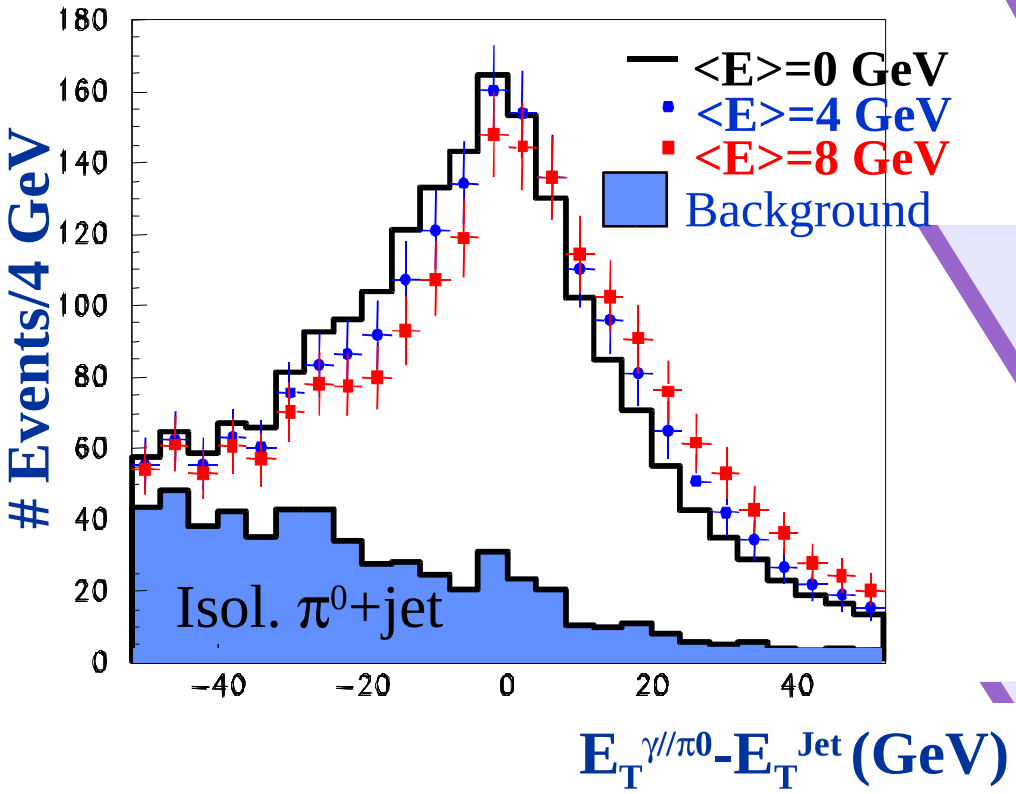

Physics Reconstruction and Selection Groups in CMS

- Four groups responsible for detector-oriented topics (reconstruction, trigger algorithm)
  - ECAL - e/γ
  - HCAL - Jet/Missing Et
  - MUON - μ
  - Tracker - b/τ
- Four groups responsible for analysis-oriented topics
  - Higgs
  - Standard Model
  - SUSY/beyond SM
  - Heavy Ion

Summary - Physics

- SM Higgs:
  - Still missing, but will be found, and measured.
- SUSY:
  - Higgs: wide range of parameter space is coverd.
- Beyond SM
  - Variety of topics will be explored.
- HI
  - One of the main physics topics at the CMS

More comprehensive review: P.Sphicas at ICHEP2002

Detector component - Si Tracker

- All Si: Pixel + Strip
- 210m^2 sensors
- 10M channels ~ 90% of CMS data
- $\delta pt/pt = (15 - 60\ pt[TeV] + 0.5)\%$
- 98% efficiency @ $|\eta| < 2.5$

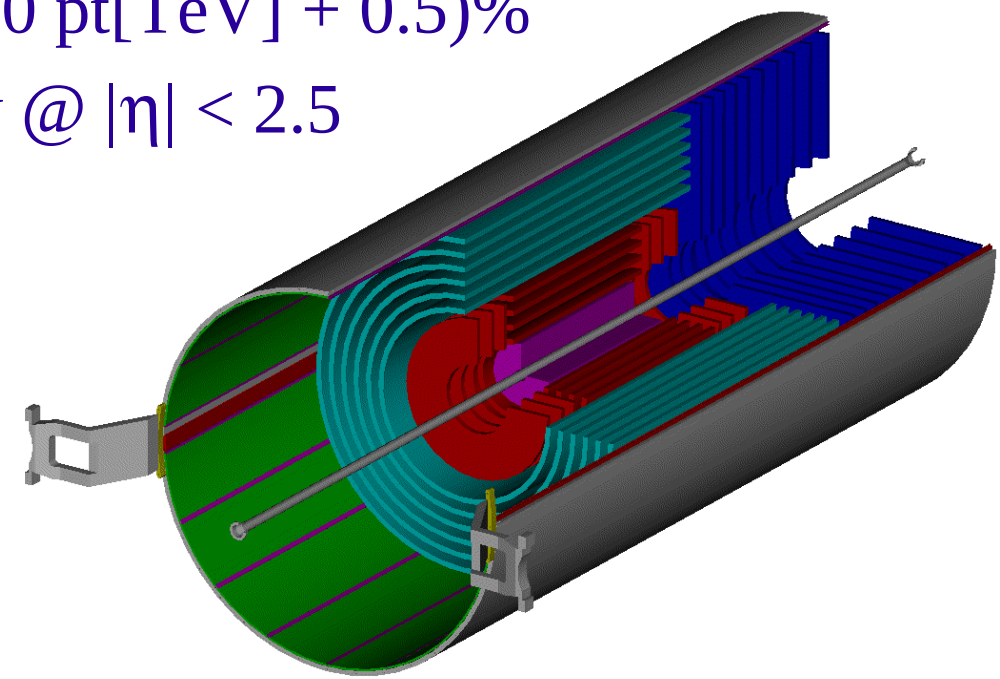

Detector component - ECAL

- PbWO4 crystal calorimeter
- Good resolution for $H \rightarrow \gamma\gamma$ and electrons.
- $\sigma/E = 3.4\%/\sqrt{E} \oplus 0.35\%$

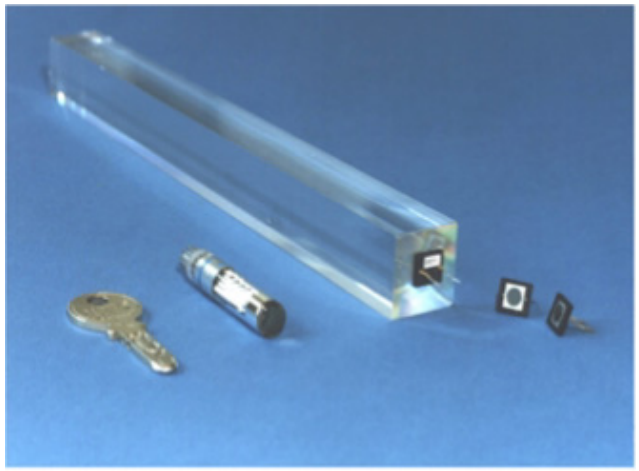

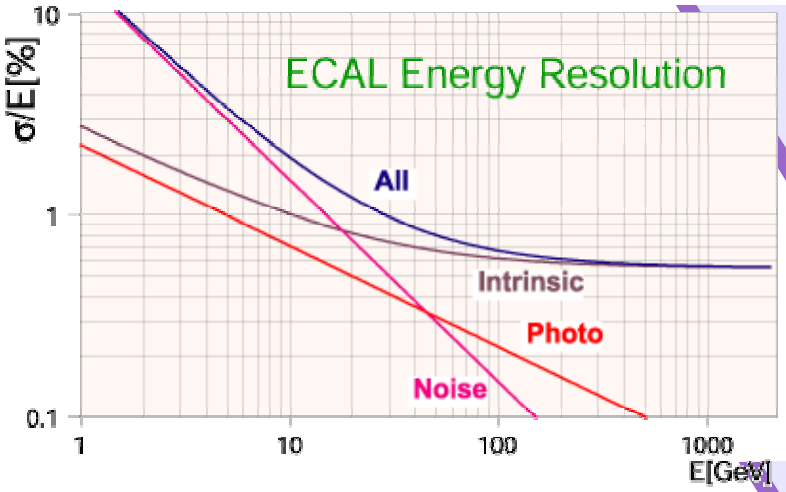

Detector component - HCAL

- HB / HE: Cu + Sci tiles
- HF: Fe + quartz fiber
- HO: Sci tiles (outside the solenoid)
- $\sigma/\sqrt{E} = 1.13/E \oplus 0.07$
- Coverage: $|\eta| < 5$

Detector component - Muon

- RPC + DT (barrel) + CSC (end-cap)
- Efficiency: 95% in $|\eta| < 2.5$
- $\sigma/pt = 1 - 1.5\%$ (w/ Si)

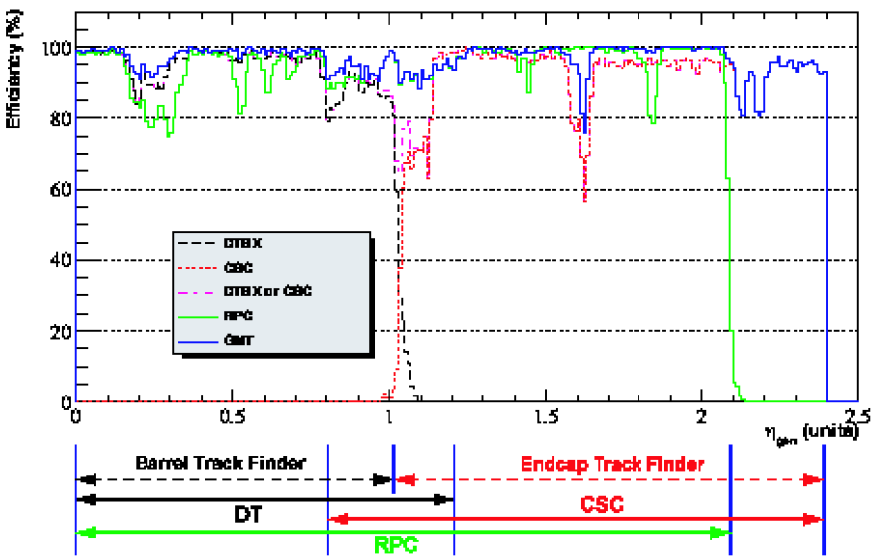

Detector component - Trigger + DAQ

- Two stages
- 100kHz L1A, 100Hz on storage.
- 1MB / event

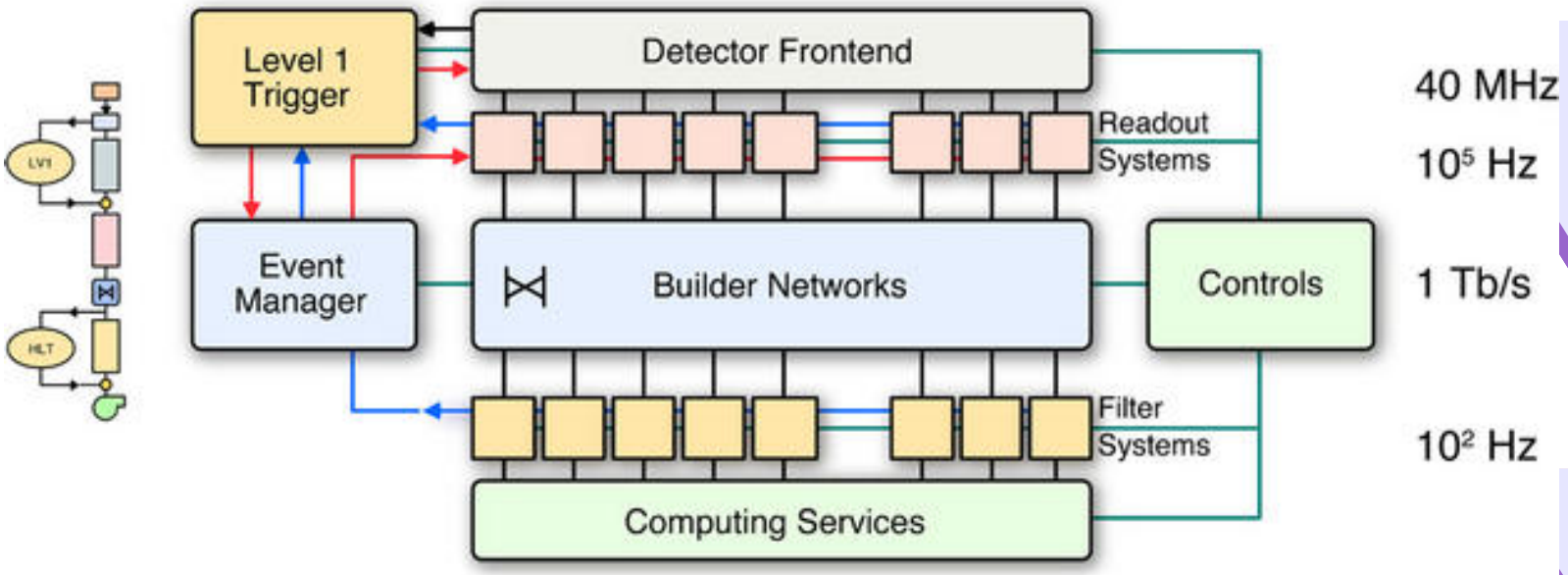

Detector component - Trigger

- L1: synchronous
  - 1/10000 rejection
  - 2-3μs decision time
  - Uses only calorimeters and muon
- HLT: asynchronous
  - Computing farm
  - Running filtering code similar to offline analysis

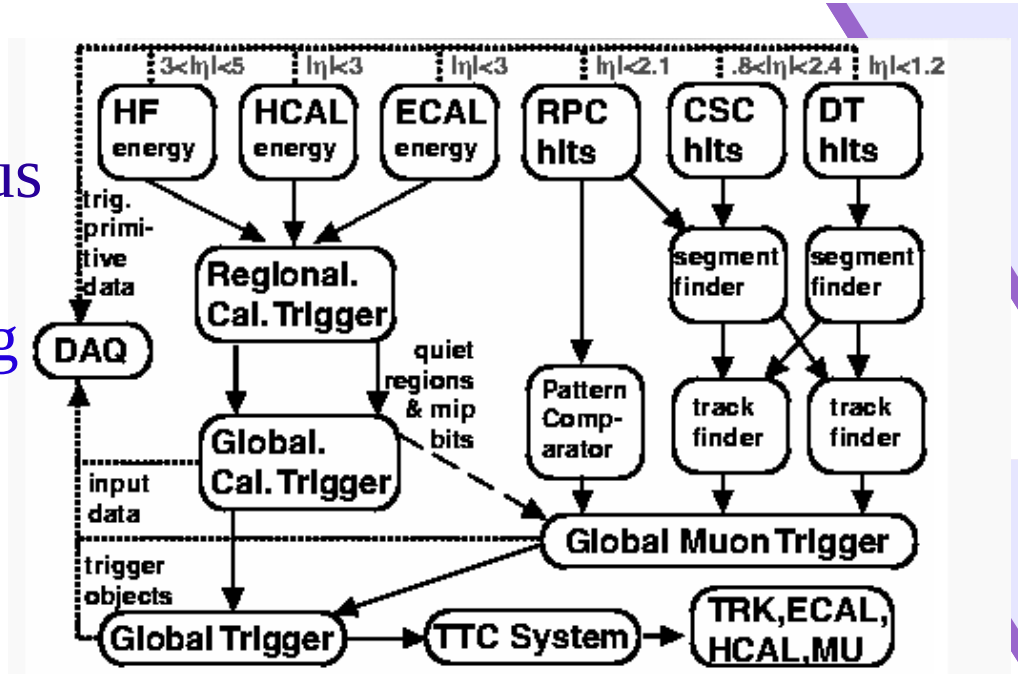

Detector component - DAQ

- Slice'd design
- A 'slice': 1/8 DAQ with a 64x64 EventBuilder
- Only 5 slices will be installed initially

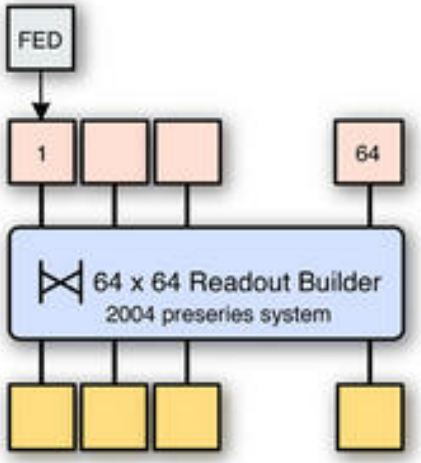

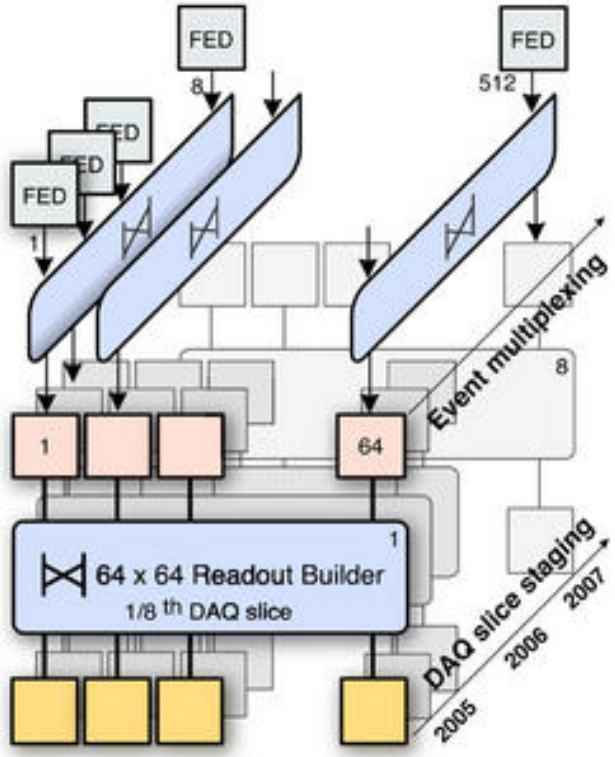

Offline Computing

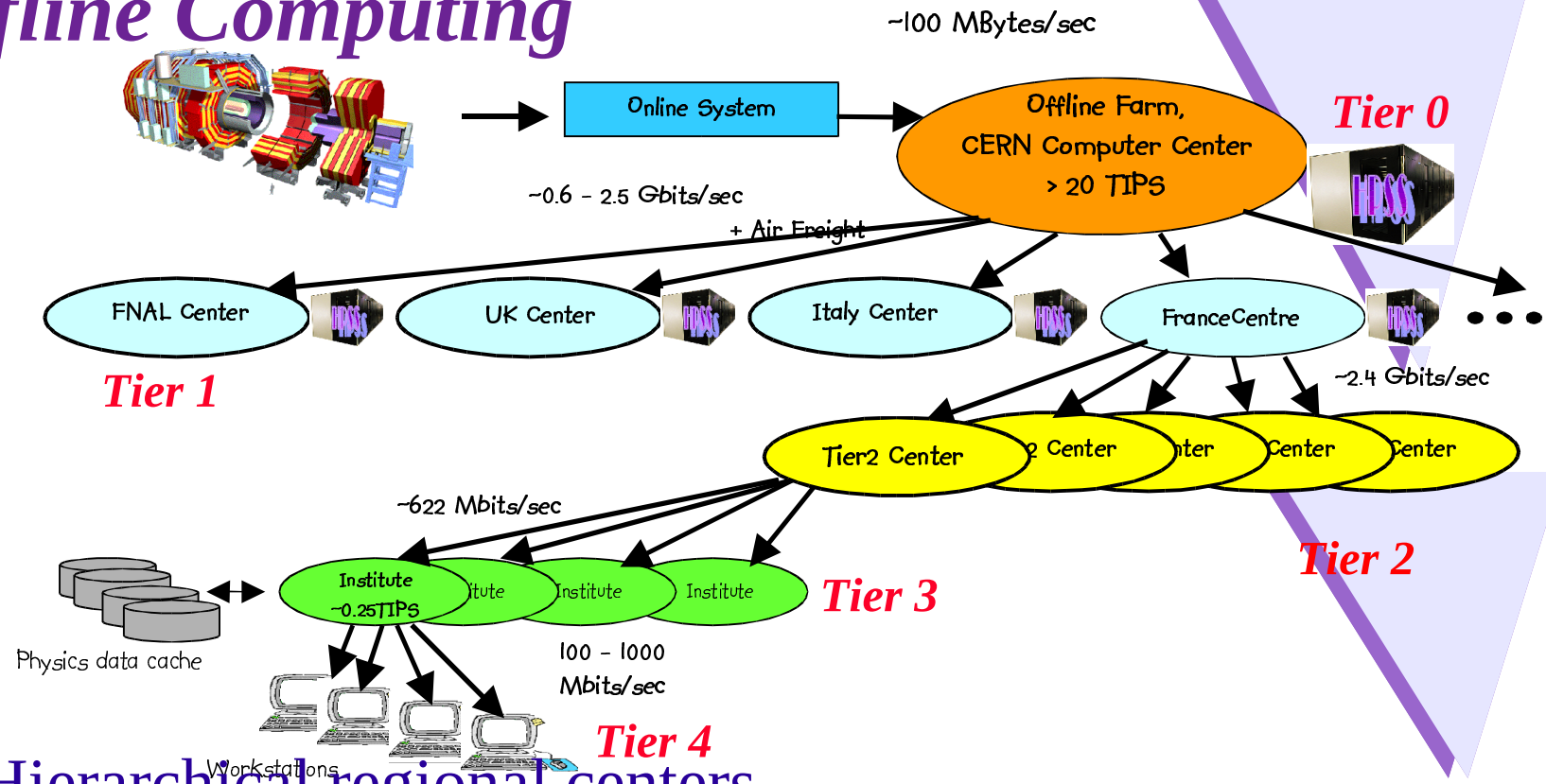

- Hierarchical regional centers
  - Tier 0: CERN, Tier 1: National (US: 1/5 capacity of T0), Tier 2: Hub universities, Tier ...: Group, Desktop
- Grid computing
  - Grid tools are used for MC production jobs now.

Summary - CMS Detector

- Large 4T solenoid
- Hermetic Muon + Calorimeter
- PbWO4 ECAL
- All Si tracker
- Sliced DAQ
  - Scalable, predictable
- Offline Computing
  - Tier structure, GRID computing, OO technology
- Some of major components were already assembled (Muon, HCAL, ...)

System Integration

- CMS is a large and complex system
- Smooth transition from design to a working system
  - Prototypes in various levels
    - Components (ASIC, board, crate, sub-detector DAQ)
  - Partial integration
    - Beam tests
  - Simulation
- Need for an intermediate step between beam test systems and the final CMS
  - US-CMS 'Slice Test' project

US-CMS Projects

- US is a major contributor to the CMS
  - >500 physicists
- Responsibility
  - HCAL
  - EMU
  - Pixel
  - Trigger
  - DAQ
  - Computing

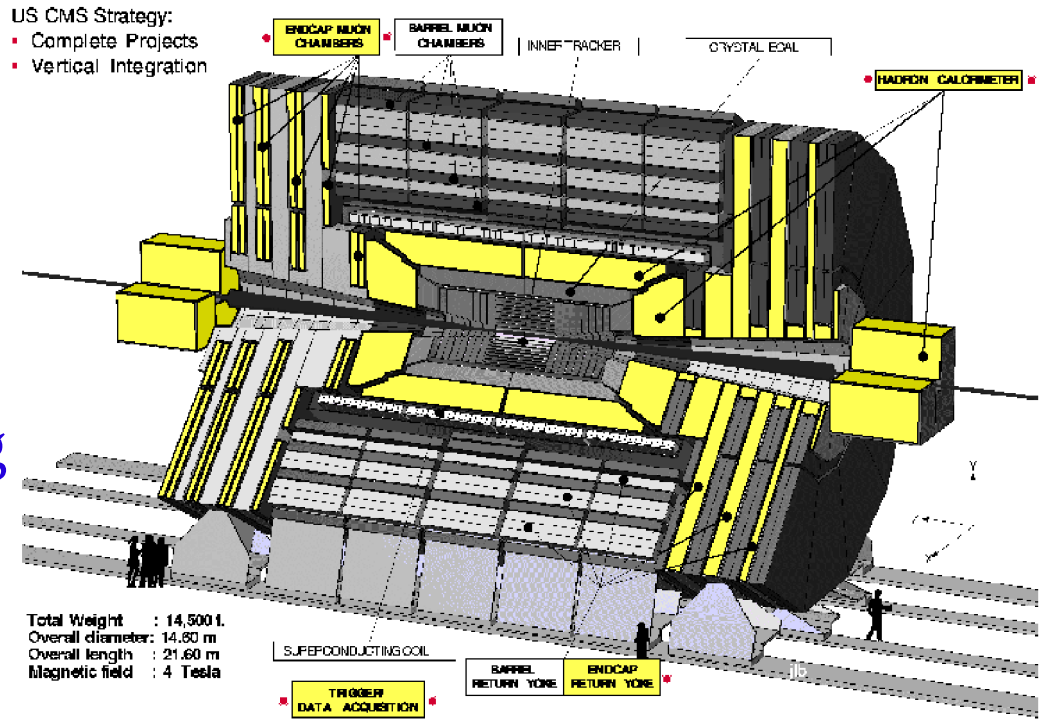

Now: Beam Tests in 2003

- Both of EMU and HCAL have beam tests from May. to Aug. 2003 at CERN
- The DAQ system needs to read out 2 - 4 VME crates.
- Their own DAQ software were used in previous tests. Transition to CMS DAQ common software is urged.

Future: US-CMS Slice Test

- A full-chain readout test in surface building (experimental area is under ground) at CERN
  - Small parts of HCAL and EMU detectors (both detectors are US's main contribution) + Mini-DAQ
- Proving completion of US detector construction projects
- Planned in 2004

From Beam Tests to the Slice Test

- Beam tests 2003
  - Use of CMS standard software in each DAQ system
    - XDAQ: DAQ framework
    - HAL: readout abstraction layer
    - EVB: standard event builder
  - Custom trigger

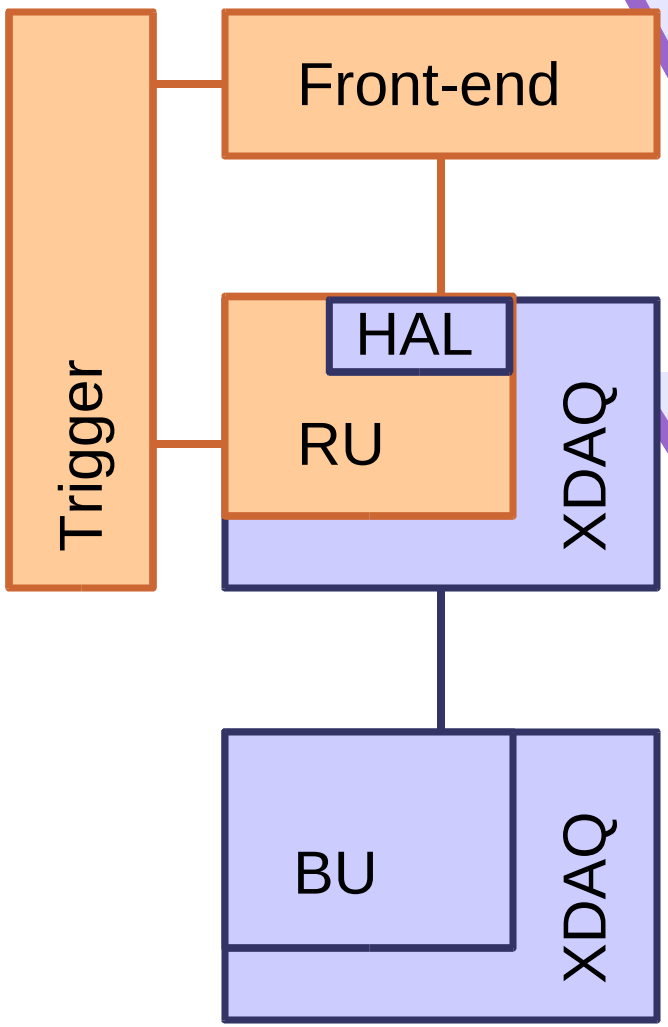

From Beam Tests to the Slice Test (cont'd)

- Slice test
  - Read out all data with a prototype EVB
  - No modification in front-end driver
  - Custom, but shared trigger
- Final DAQ
  - Reuse of beam test DAQ as a local DAQ system

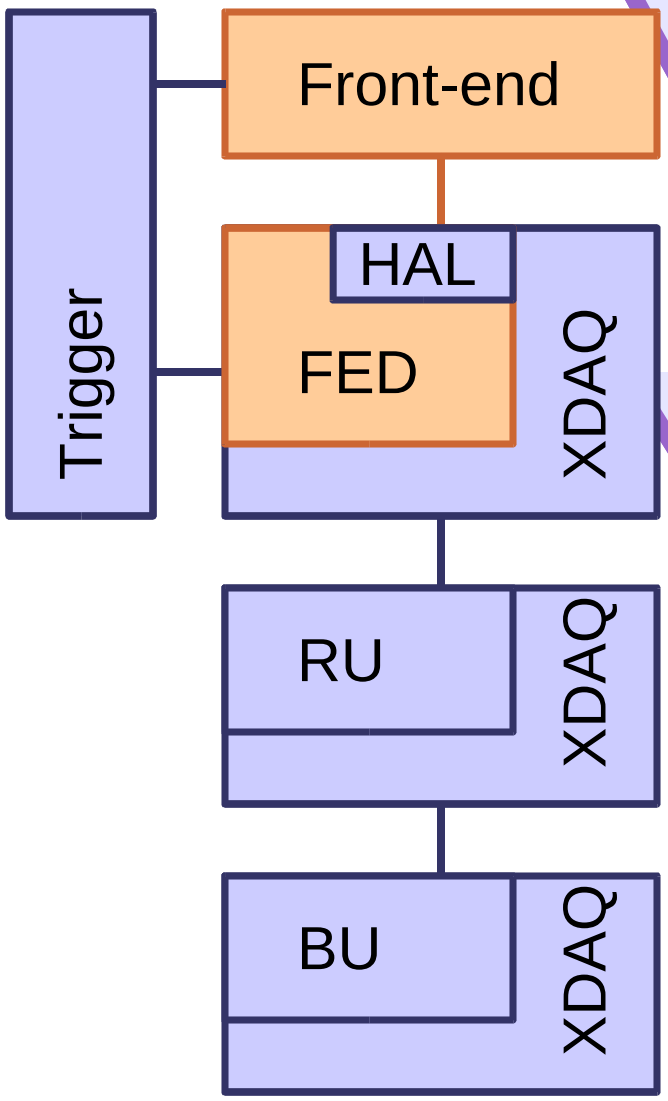

Summary - Slice Test

- Slice test provides multiple benefits
  - Checking front-end electronics
  - Mini-integration test
  - Realistic test of the prototype DAQ
- Smooth transition from beam test to the final system
  - Use of common software kit
  - Close communication among separate groups
- This is a US-CMS project, but supported by the CMS and CERN.

Future Plan

- CMS is ready for collision by summer 2007
- Initial physics runs in fall 2007
  - Low luminosity: $10^{33}cm^{-2}s^{-1}$
  - Staged detector
    - no ME4, 3rd forward pixel, forward RPC
    - 50% DAQ
    - smaller # of readout channels
- Installation of the full CMS later for nominal luminosity.

Summary

- LHC opens new era of collider physics.
- CMS has a wide variety of physics programs.
- CMS detector is designed to attack all possible physics programs.
- The experiment will become ready for collisions in 2007.
- CMS integration is ensured to be feasible through smooth transition from prototypes to the final system.