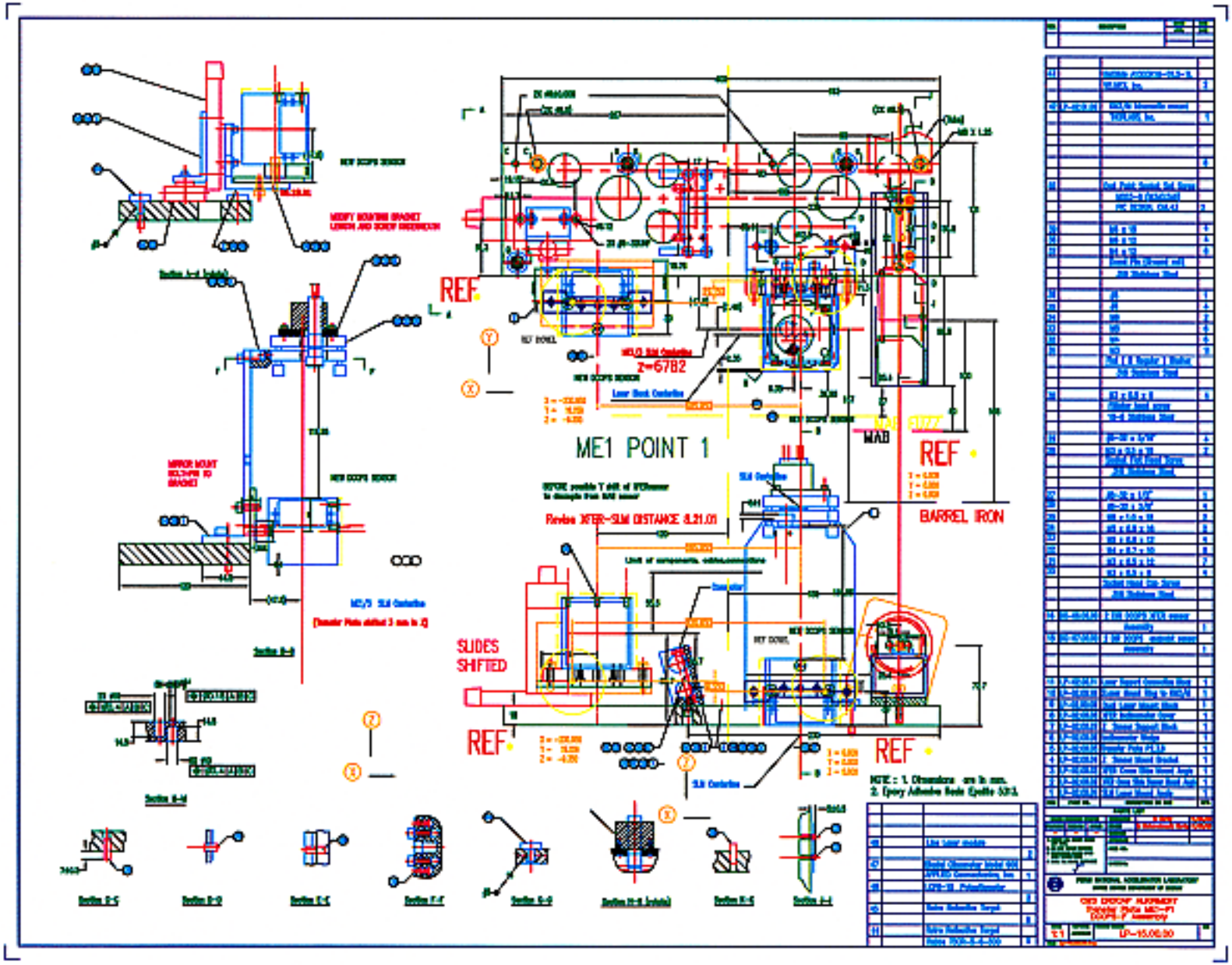
REF
Z=6782
ME1 POINT 1
MAB
REF
BARREL IRON
SLIDES SHIFTED
REF
REF
NOTE: 1. Dimensions are in mm.
2. Epoxy Adhesive Resin Epolite 5313.

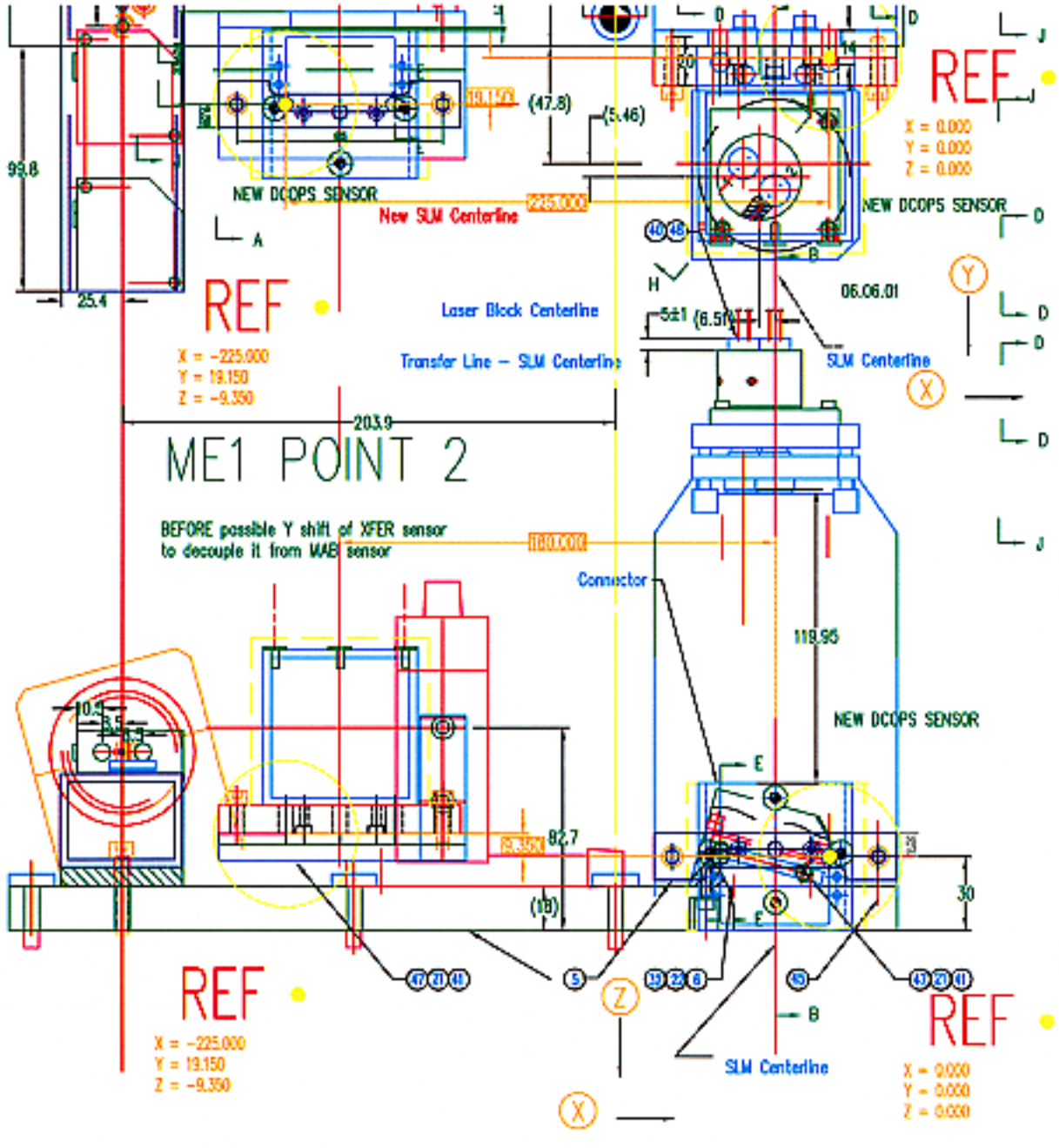

		Dowel Pin (
		316 Stainl
36		#8
35		#6
34		M6
33		M5
32		M4
31		M3
		Flat (8 Reg
		316 Stainl
30		M3 x 0.5 x
		Fillister head
		18-8 Stainle
29		#8-32 x 5/1
28		M3 x 0.5 x 1
		Socket Flat H
		316 Stainle
27		#8-32 x 1/2
26		#6-32 x 3/8
25		M6 x 1.0 x 1
24		M5 x 0.8 x
23		M5 x 0.8 x
22		M4 x 0.7 x
21		M3 x 0.5 x
20		M3 x 0.5 x
		Socket Head C
		316 Stainle
16	DC-06.00.00	2 DIR DCOPS
		Assemb
15	DC-07.00.00	2 DIR DCOPS
		Assemb
11	LP-02.00.11	Laser Support C
10	LP-02.00.10	2Laser Mount R
9	LP-02.00.09	Dual Laser Mo
8	LP-02.00.08	XFER Inclinome
7	LP-02.00.07	Z Sensor Supp
6	LP-02.00.06	Inclinometer Me
5	LP-02.00.05	Transfer Plate F
4	LP-02.00.04	Z Sensor Mou
3	LP-02.00.03	XFER Cross Sli

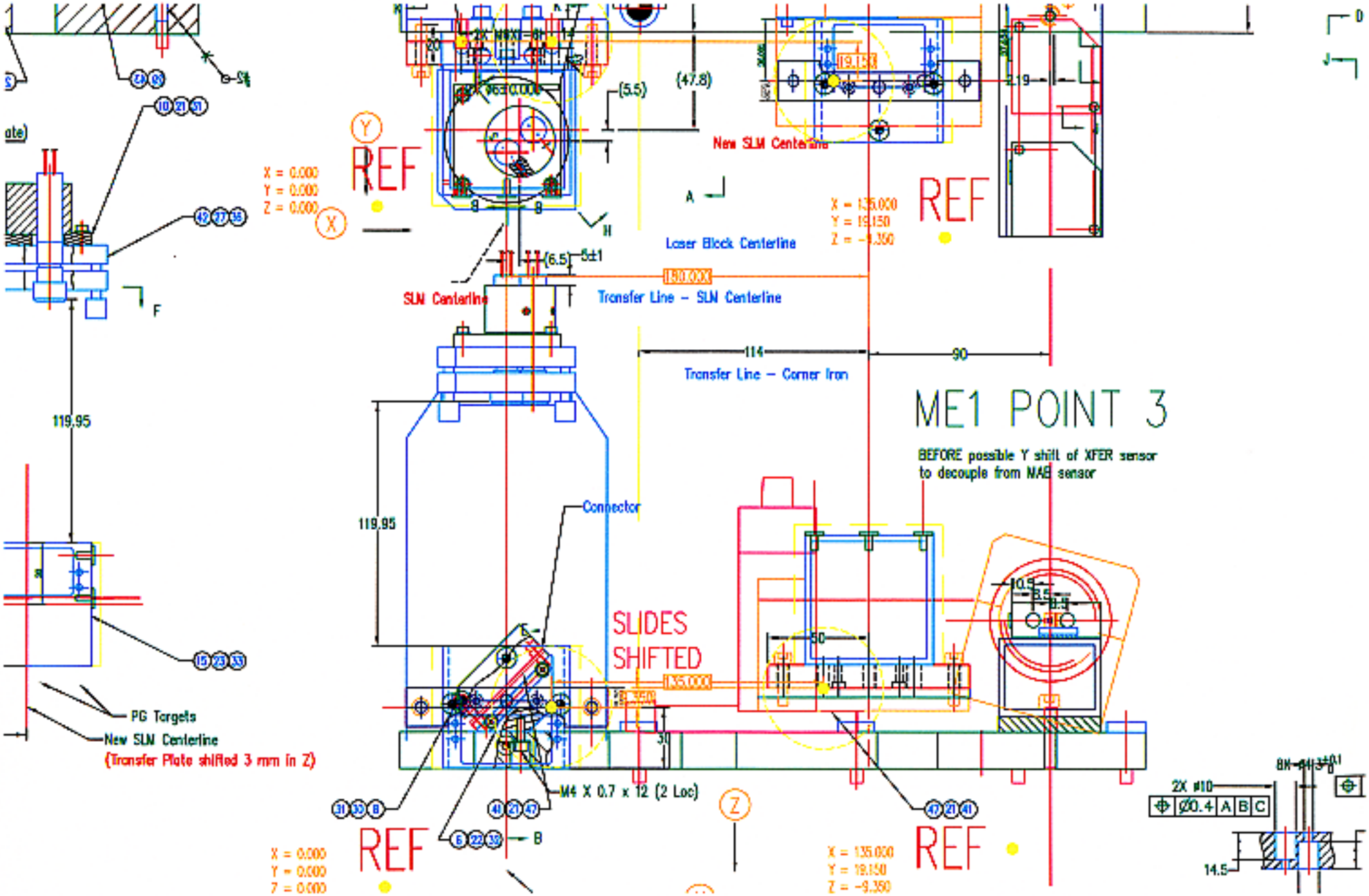

ME1 POINT 3
BEFORE possible Y shift of XFER sensor to decouple from MAB sensor
New SLM Centerline
Laser Block Centerline
SLM Centerline
Transfer Line – SLM Centerline
Transfer Line – Corner Iron
Connector
SLIDES SHIFTED
REF
X = 0.000
Y = 0.000
Z = 0.000
X = 135.000
Y = 19.150
Z = -9.350
119.95
(5.5)
(47.8)
(6.5)
5±1
180.000
114
90
135.000
M4 X 0.7 x 12 (2 Loc)
PG Targets
New SLM Centerline
(Transfer Plate shifted 3 mm in Z)
2X ø10
Ø0.4 A B C
14.5

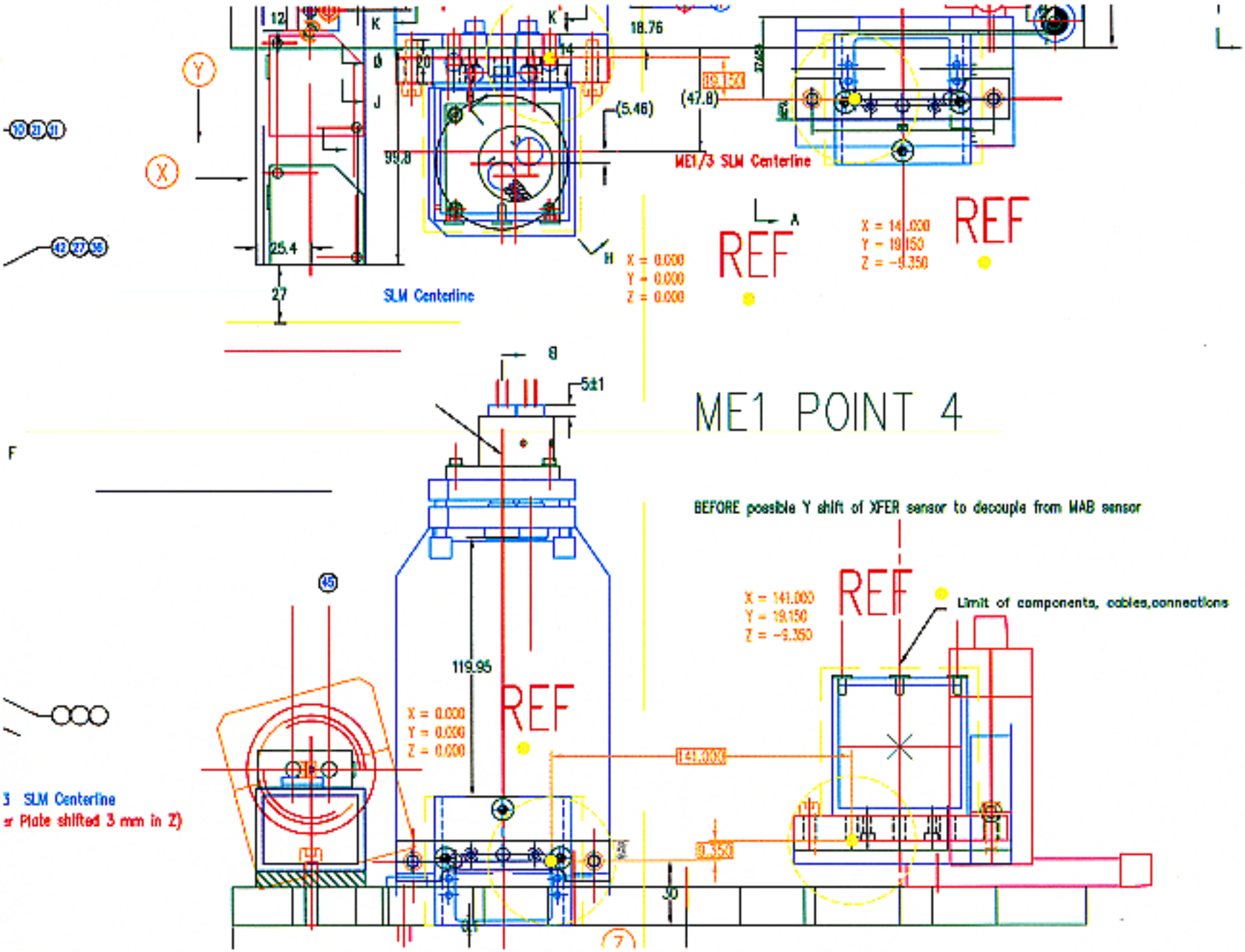

		Dowel Pin
		316 Sta
36		#8
35		#8
34		M6
33		M5
32		M4
31		M3
		Flat (8 R
		316 Sta
30		M3 x 0.5
		Fillister he
		18-8 Stai
29		#8-32 x 5
28		M3 x 0.5
		Socket Fla
		316 Stai
27		#8-32 x 1
26		#6-32 x
25		M6 x 1.0
24		M5 x 0.8
23		M5 x 0.8
22		M4 x 0.7
21		M3 x 0.5
20		M3 x 0.5
		Socket Hea
		316 Stai
16	DC-06.00.00	2 DIR DCOF
		Asse
15	DC-07.00.00	2 DIR DCOP
		Asse
11	LP-02.00.11	Laser Support
10	LP-02.00.10	2Laser Moun
9	LP-02.00.09	Dual Laser
8	LP-02.00.08	XFER Inclino
7	LP-02.00.07	Z Sensor S

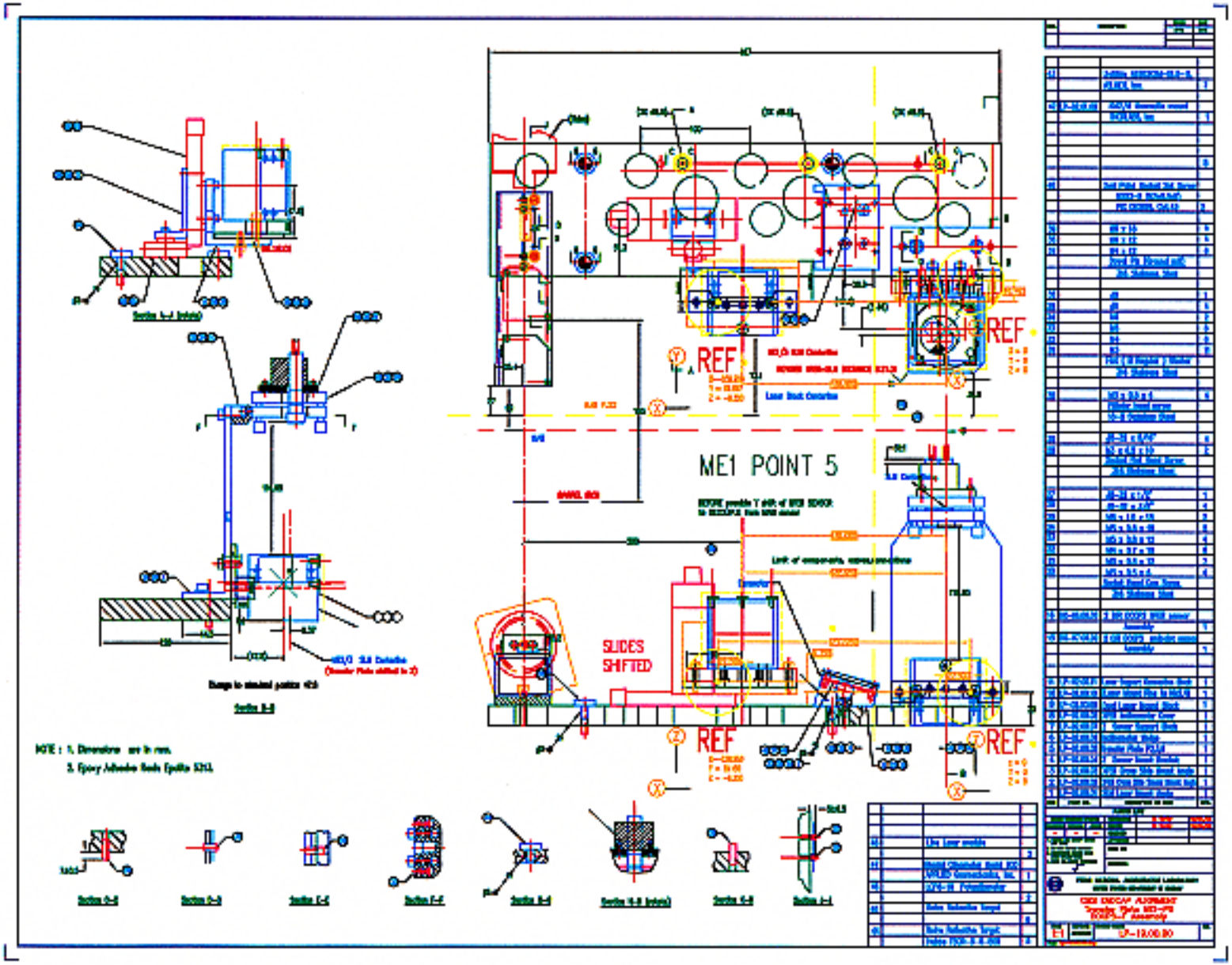
ME1 POINT 5
SLIDES SHIFTED
REF
REF
REF
REF
REF
NOTE : 1. Dimensions are in mm.
2. Epoxy Adhesive Resin Epoxite 5213.

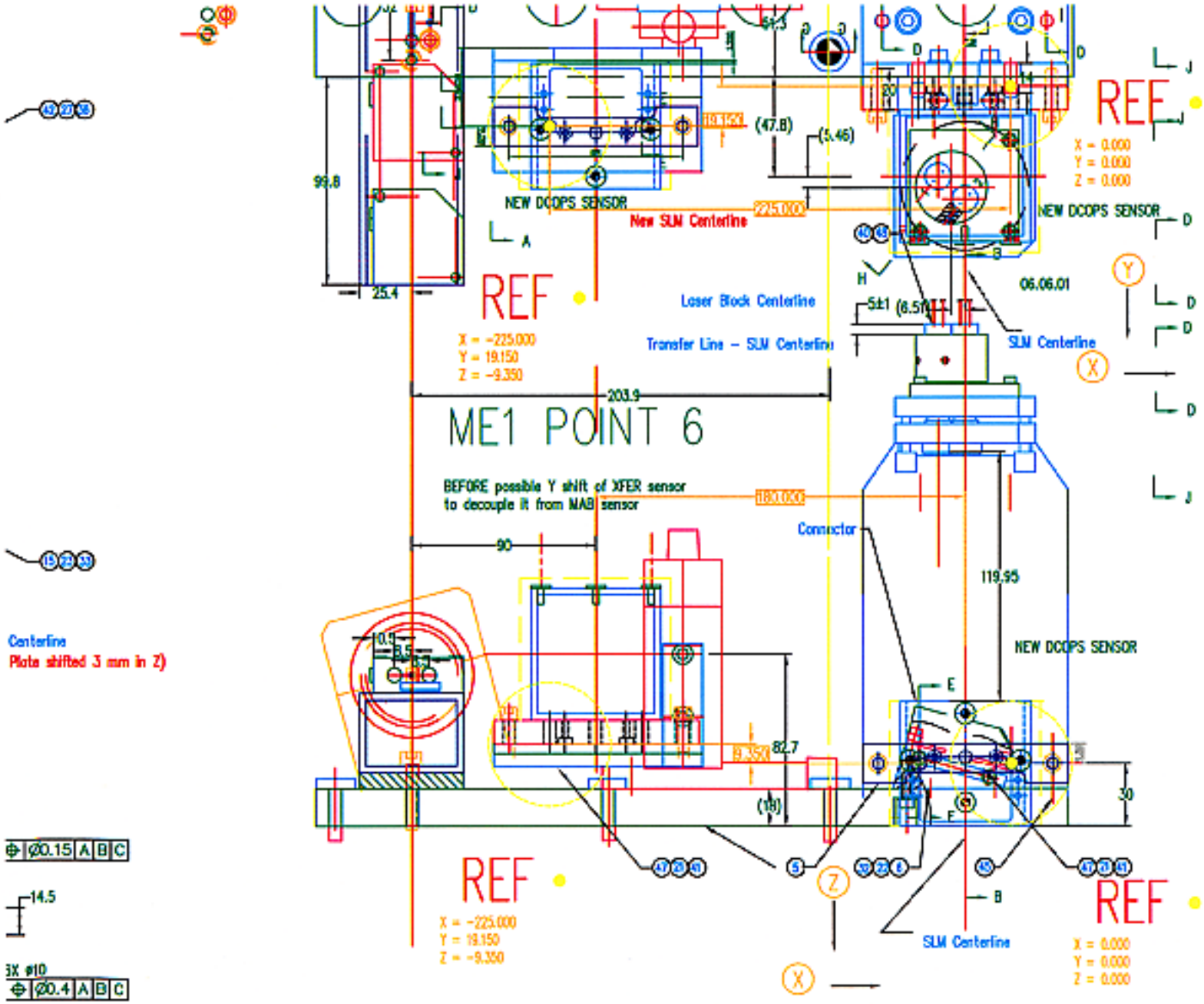

38		M6 x 12	4
37		M4 x 12	6
		Dowel Pin (Ground m6)	
		316 Stainless Steel	
36		ø8	1
35		ø6	4
34		M6	2
33		M5	6
32		M4	6
31		M3	11
		Flat (B Regular) Washer	
		316 Stainless Steel	
30		M3 x 0.5 x 6	4
		Fillister head screw	
		18-8 Stainless Steel	
29		ø8-32 x 5/16"	4
28		M3 x 0.5 x 10	2
		Socket Flat Head Screw	
		316 Stainless Steel	
27		ø8-32 x 1/2"	1
26		ø6-32 x 3/8"	4
25		M6 x 1.0 x 18	2
24		M5 x 0.8 x 16	2
23		M5 x 0.8 x 12	4
22		M4 x 0.7 x 10	6
21		M3 x 0.5 x 12	7
20		M3 x 0.5 x 6	4
		Socket Head Cap Screw	
		316 Stainless Steel	
16	DC-06.00.00	2 DIR DCOPS XFER sensor	
		Assembly	1
15	DC-07.00.00	2 DIR DCOPS endpoint sensor	
		Assembly	1
11	LP-02.00.11	Laser Support Connection Block	1
10	LP-02.00.10	2Laser Mount Ring to XM2/M	1
9	LP-02.00.09	Dual Laser Mount Block	1
8	LP-02.00.08	XFER Inclinometer Cover	1
7	LP-02.00.07	Z Sensor Support Block	1
6	LP-02.00.06	Inclinometer Wedge	1
5	LP-02.00.05	Transfer Plate P2,3,6	1
4	LP-02.00.04	Z Sensor Mount Bracket	1
3	LP-02.00.03	XFER Cross Slide Mount Angle	1

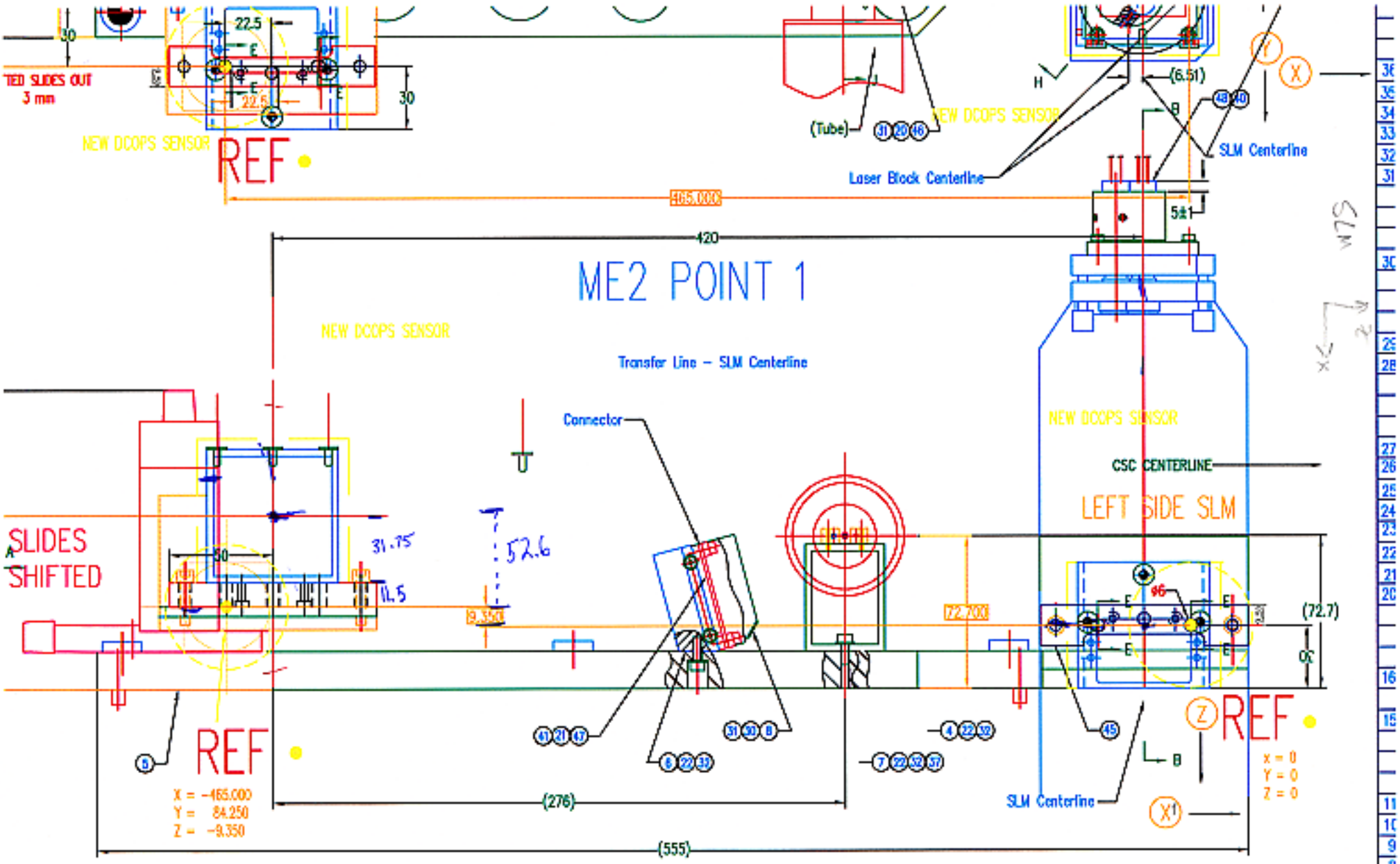

ME2 POINT 1
NEW DCOPS SENSOR
REF
Transfer Line – SLM Centerline
Connector
Laser Block Centerline
SLM Centerline
CSC CENTERLINE
LEFT SIDE SLM
SLIDES SHIFTED
(Tube)
(6.51)
(72.7)
(276)
(555)
465.000
420
72.700
9.350
31.75
52.6
11.5
5±1
X = -465.000
Y = 84.250
Z = -9.350
x = 0
Y = 0
Z = 0

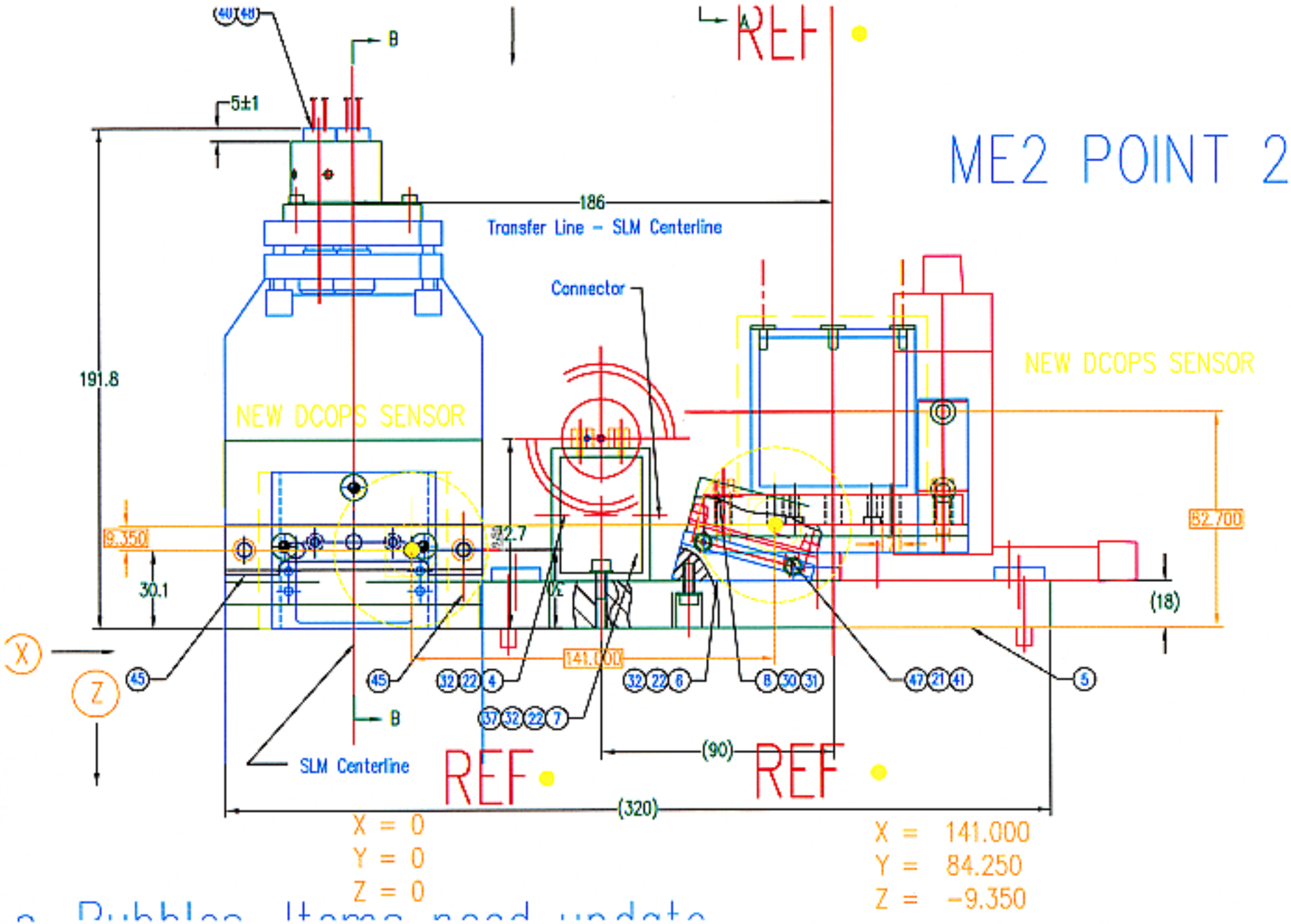

Bubbles Items need update

ME2 POINT 3

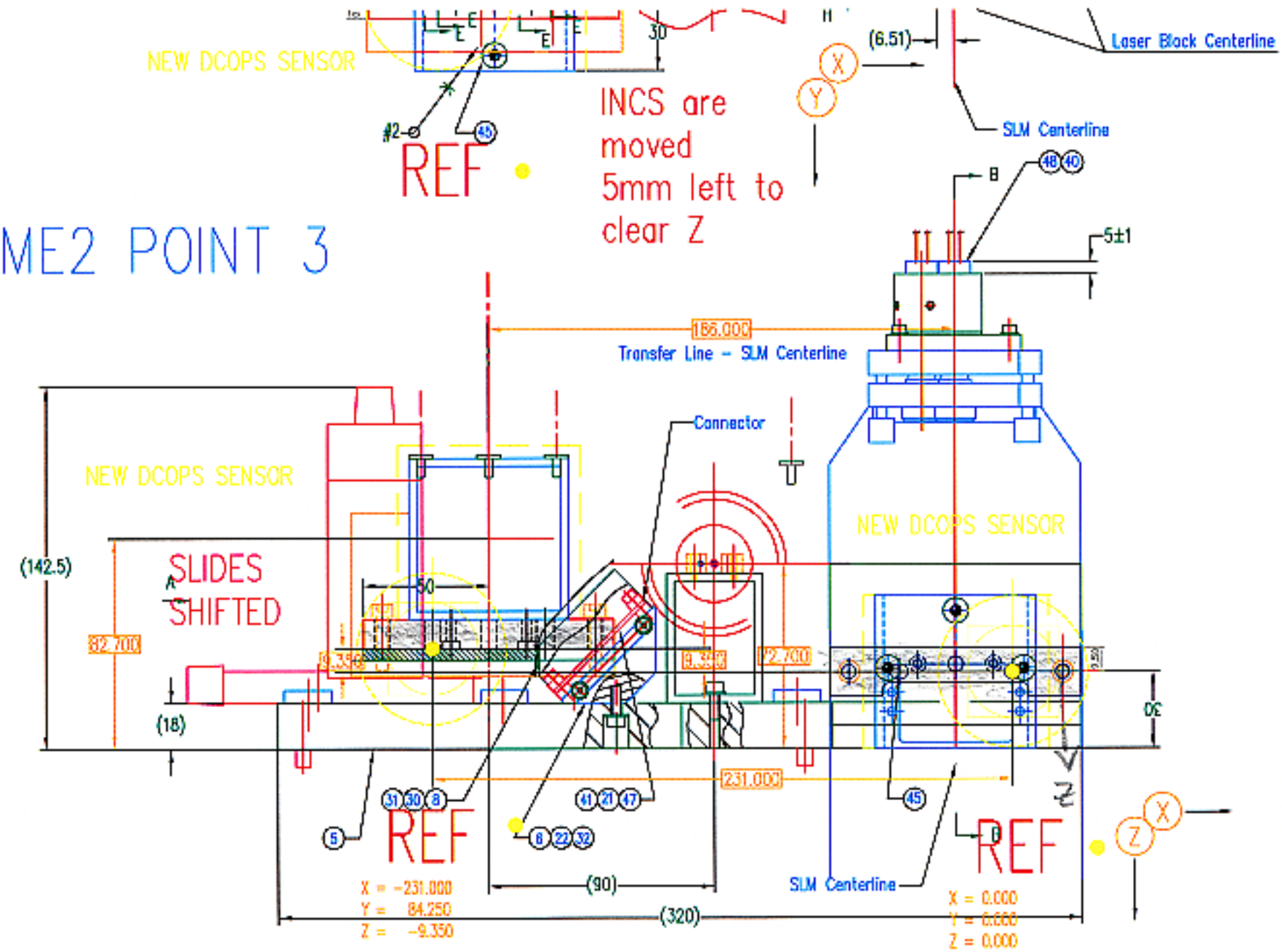
NEW DCOPS SENSOR
30
(6.51)
Laser Block Centerline
SLM Centerline
INCS are moved 5mm left to clear Z
REF
5±1
166.000
Transfer Line - SLM Centerline
Connector
NEW DCOPS SENSOR
NEW DCOPS SENSOR
(142.5)
SLIDES SHIFTED
50
82.700
9.350
9.350
2.700
(18)
30
231.000
REF
REF
X = -231.000
Y = 84.250
Z = -9.350
(90)
(320)
SLM Centerline
X = 0.000
Y = 0.000
Z = 0.000

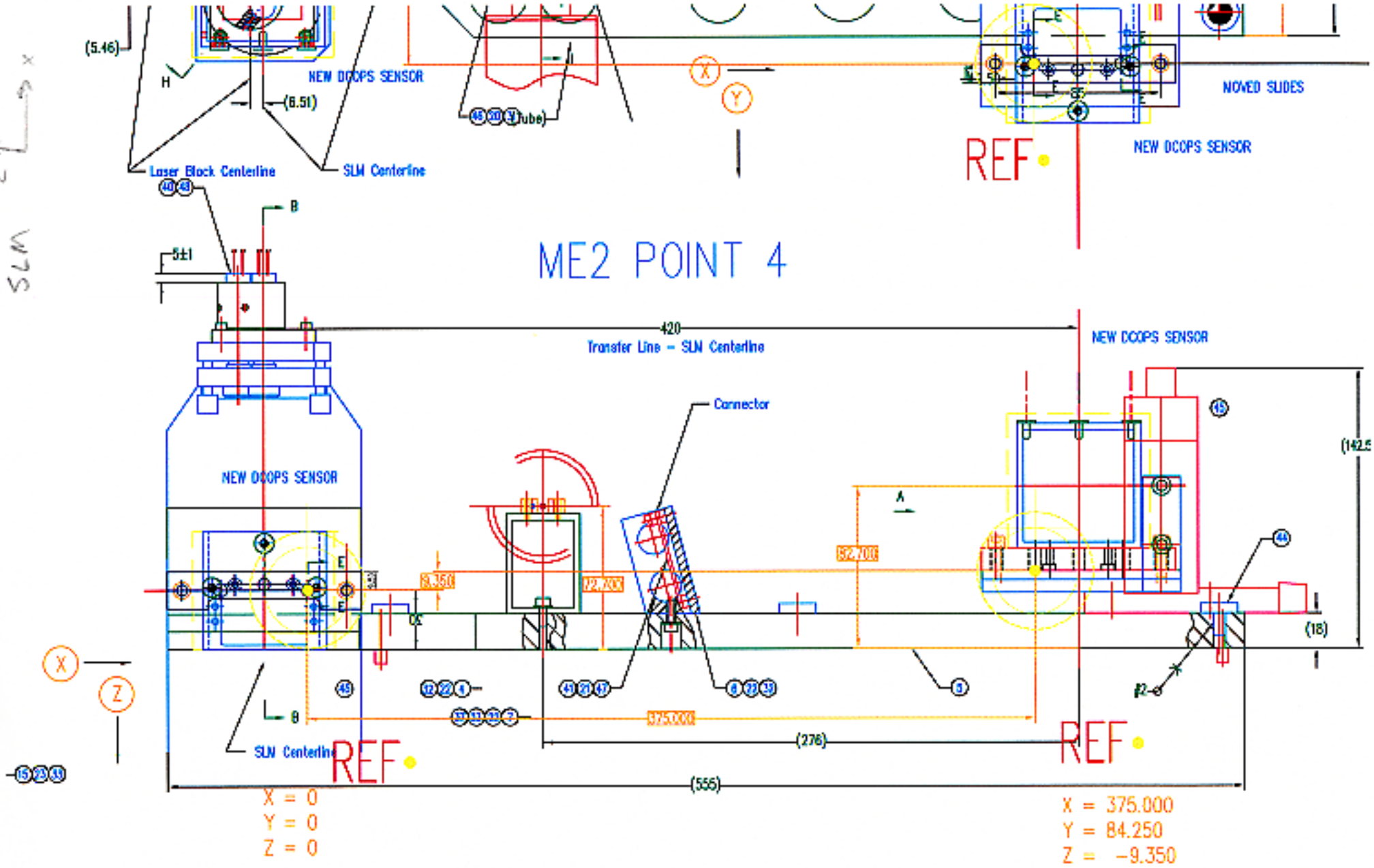

ME2 POINT 4
NEW DCOPS SENSOR
Laser Block Centerline
SLM Centerline
MOVED SLIDES
REF
Transfer Line - SLM Centerline
Connector
420
(5.46)
(6.51)
(142.5
(18)
(276)
(555)
375.000
72.700
82.700
9.350
5±1
X = 0
Y = 0
Z = 0
X = 375.000
Y = 84.250
Z = -9.350

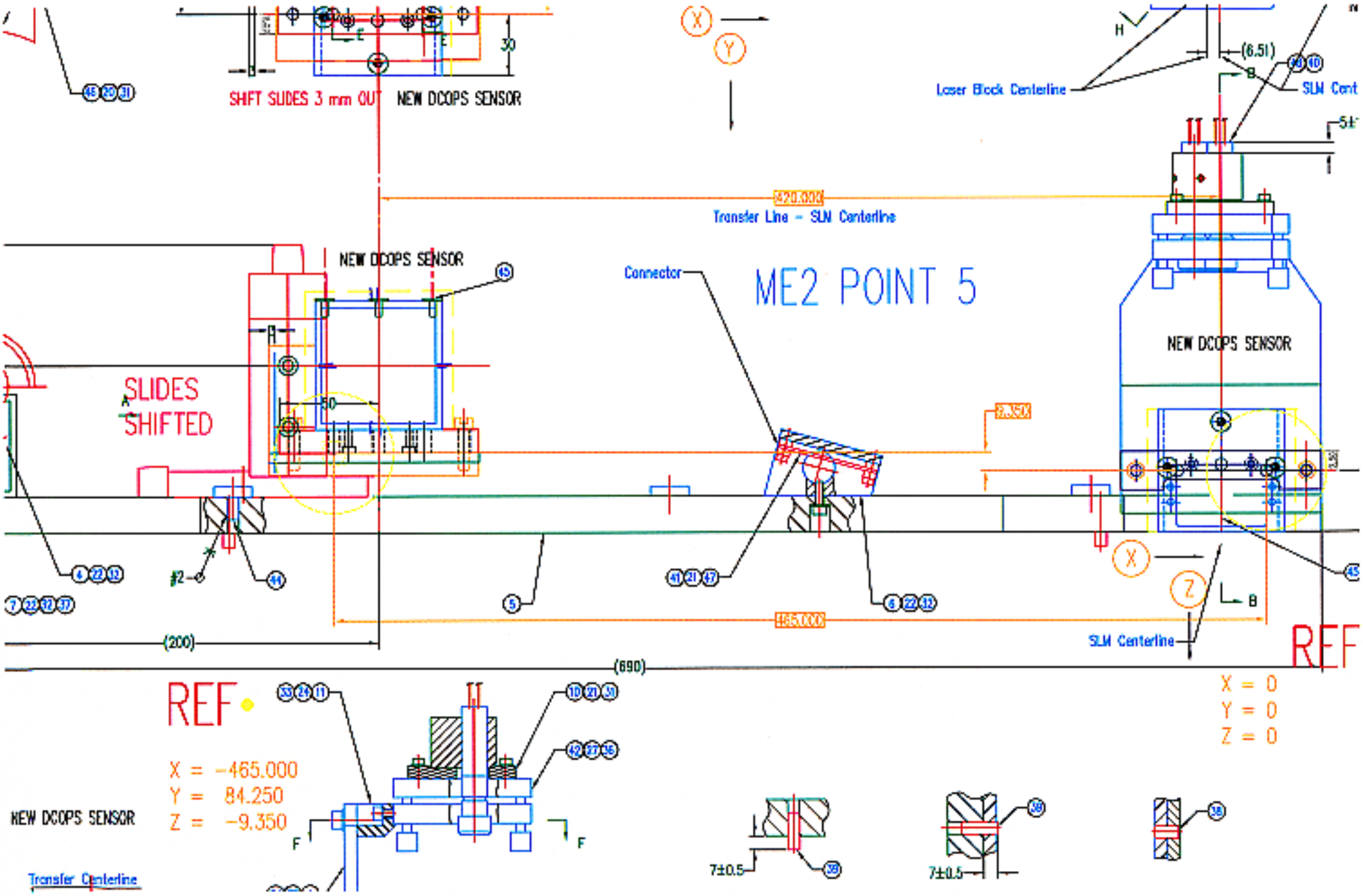
SHIFT SLIDES 3 mm OUT
NEW DCOPS SENSOR
Laser Block Centerline
SLM Cent
Transfer Line - SLM Centerline
NEW DCOPS SENSOR
Connector
ME2 POINT 5
NEW DCOPS SENSOR
SLIDES SHIFTED
SLM Centerline
REF
X = 0
Y = 0
Z = 0
REF
X = -465.000
Y = 84.250
Z = -9.350
NEW DCOPS SENSOR
Transfer Centerline

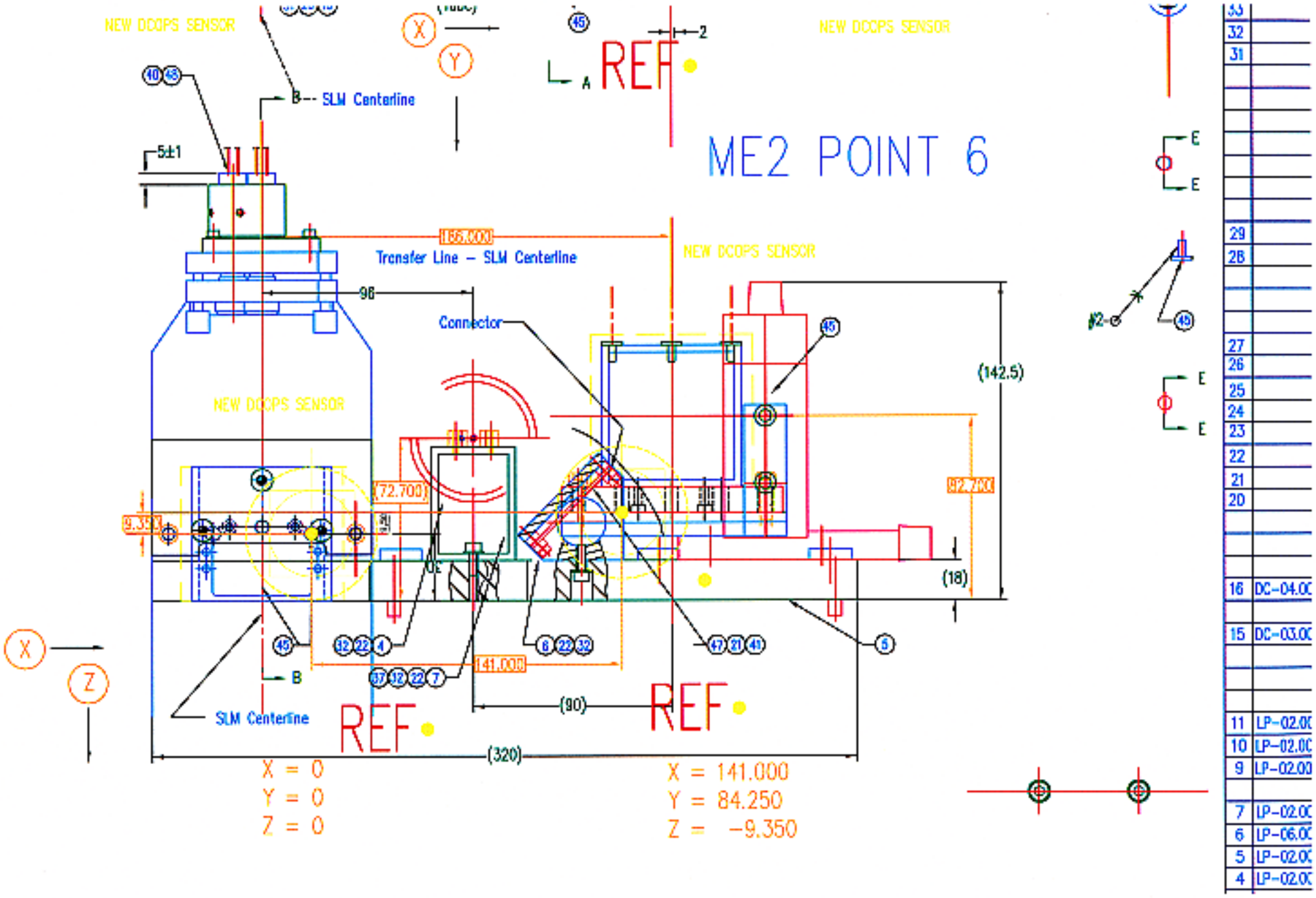

ME2 POINT 6
NEW DCOPS SENSOR
NEW DCOPS SENSOR
NEW DCOPS SENSOR
NEW DCOPS SENSOR
SLM Centerline
SLM Centerline
Transfer Line – SLM Centerline
Connector
166.000
96
5±1
(142.5)
(72.700)
92.700
9.350
(18)
141.000
(90)
(320)
REF
REF
REF
X = 0
Y = 0
Z = 0
X = 141.000
Y = 84.250
Z = −9.350
33
32
31
29
28
27
26
25
24
23
22
21
20
16 DC-04.00
15 DC-03.00
11 LP-02.00
10 LP-02.00
9 LP-02.00
7 LP-02.00
6 LP-06.00
5 LP-02.00
4 LP-02.00

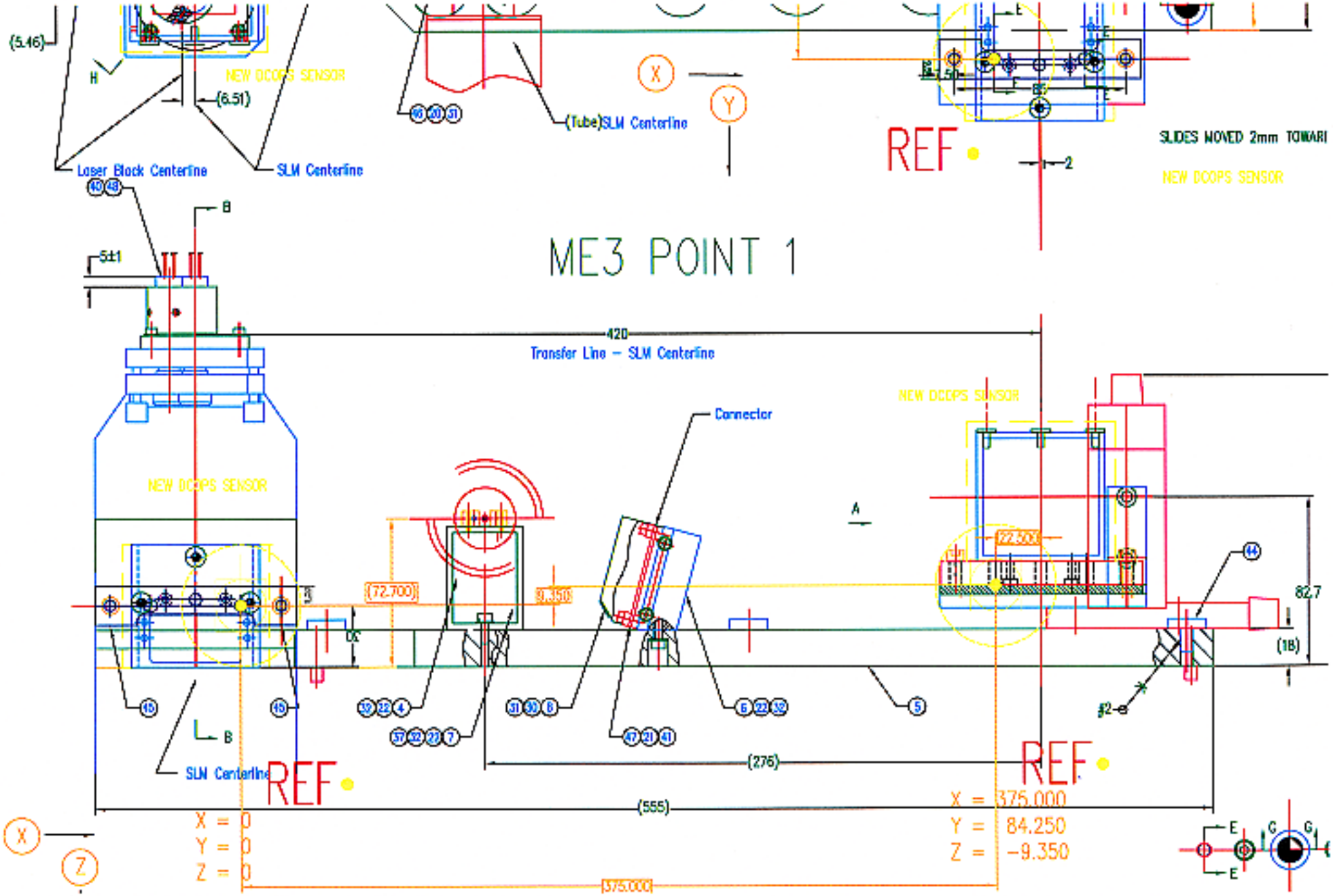

ME3 POINT 1
NEW DCOPS SENSOR
Laser Block Centerline
SLM Centerline
(Tube)SLM Centerline
SLIDES MOVED 2mm TOWARI
REF
Transfer Line – SLM Centerline
Connector
420
(555)
(276)
(72.700)
9.350
22.500
82.7
(18)
X = 0
Y = 0
Z = 0
X = 375.000
Y = 84.250
Z = -9.350
375.000

ME3 POINT 2

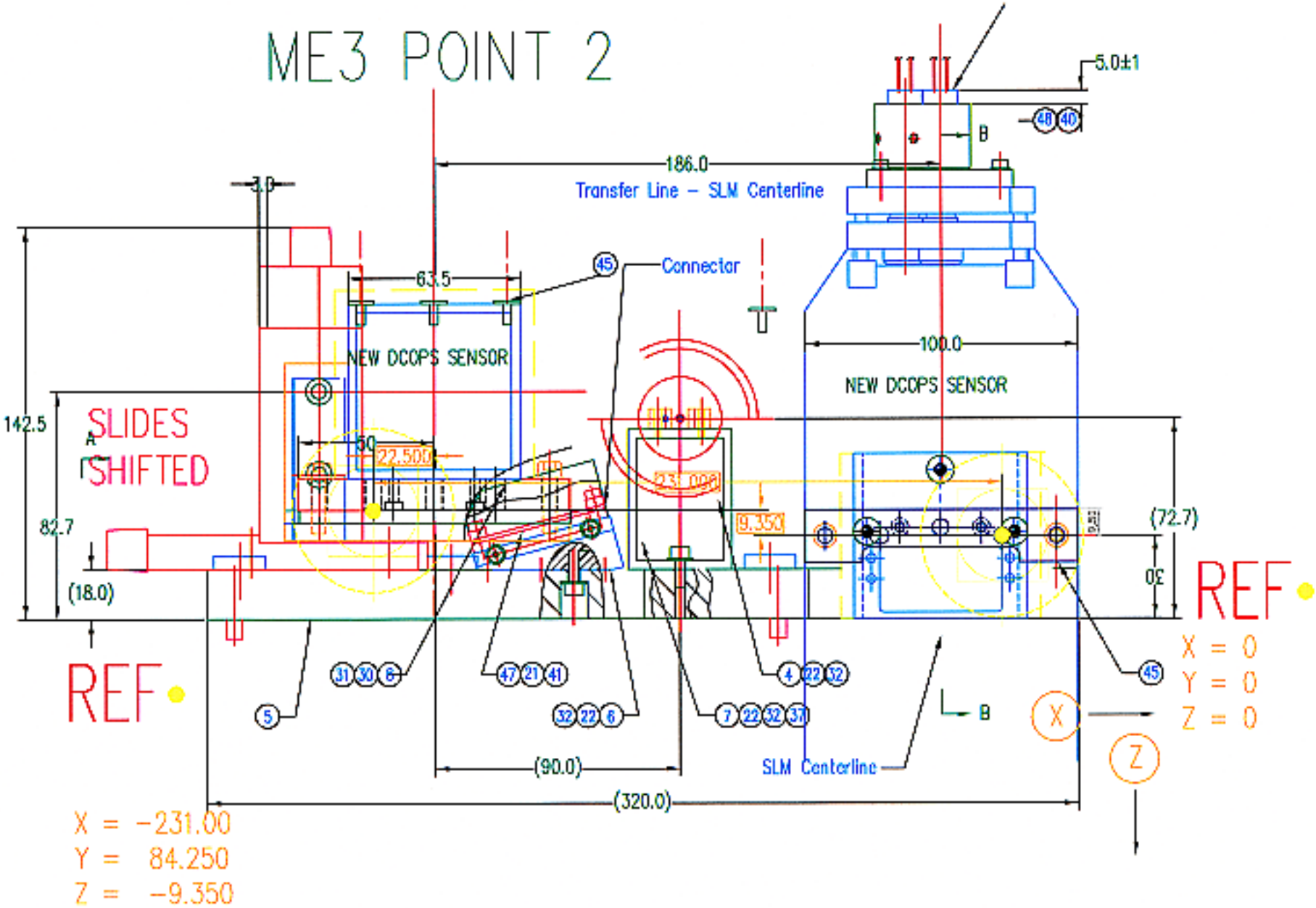
5.0±1
186.0
Transfer Line – SLM Centerline
3.0
63.5
Connector
NEW DCOPS SENSOR
100.0
NEW DCOPS SENSOR
142.5
SLIDES
SHIFTED
50
22.500
231.000
9.350
82.7
(18.0)
(72.7)
30
REF
REF
X = 0
Y = 0
Z = 0
(90.0)
SLM Centerline
(320.0)
X = -231.00
Y = 84.250
Z = -9.350

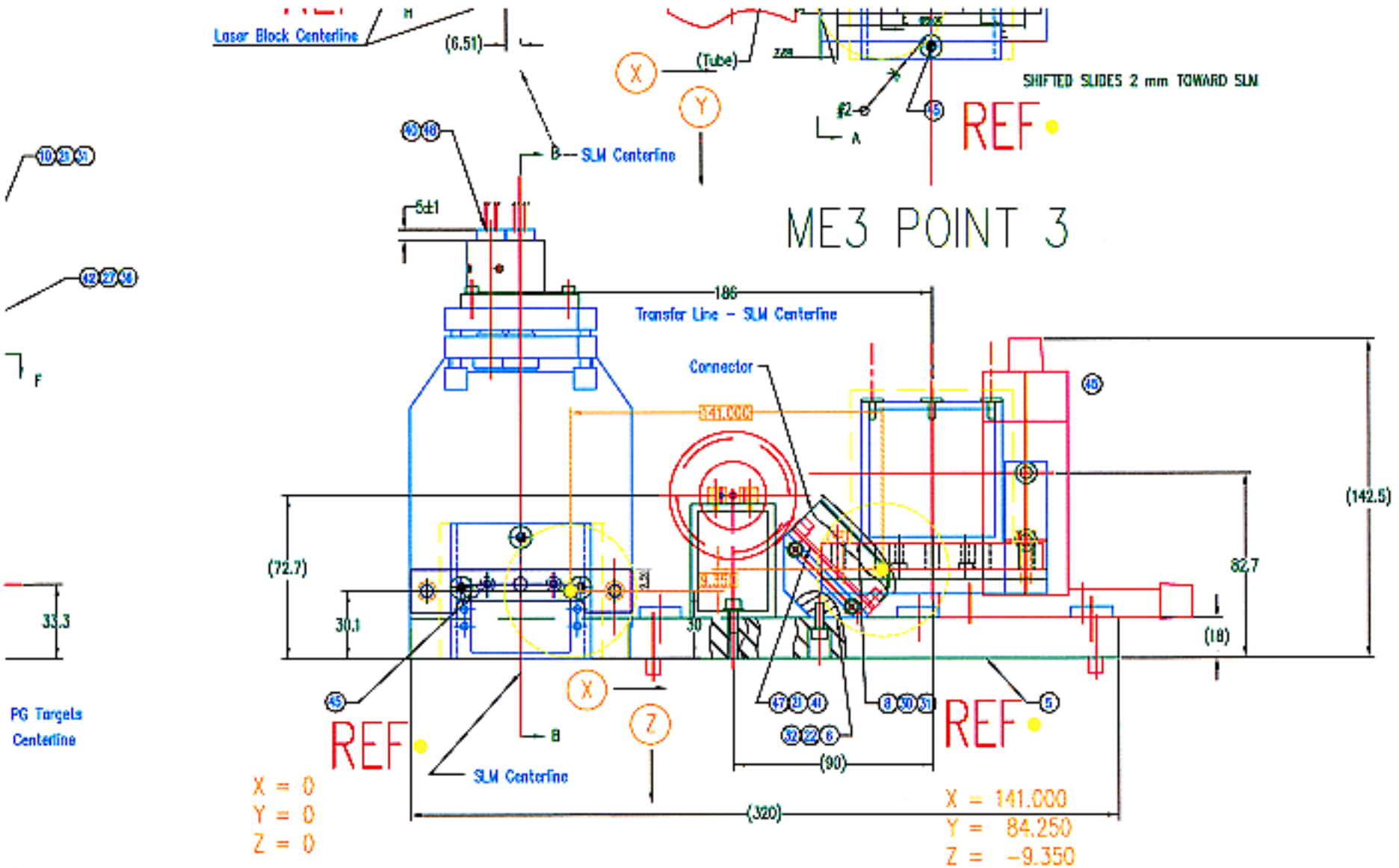

NOTE : 1. Dimensions are in mm.

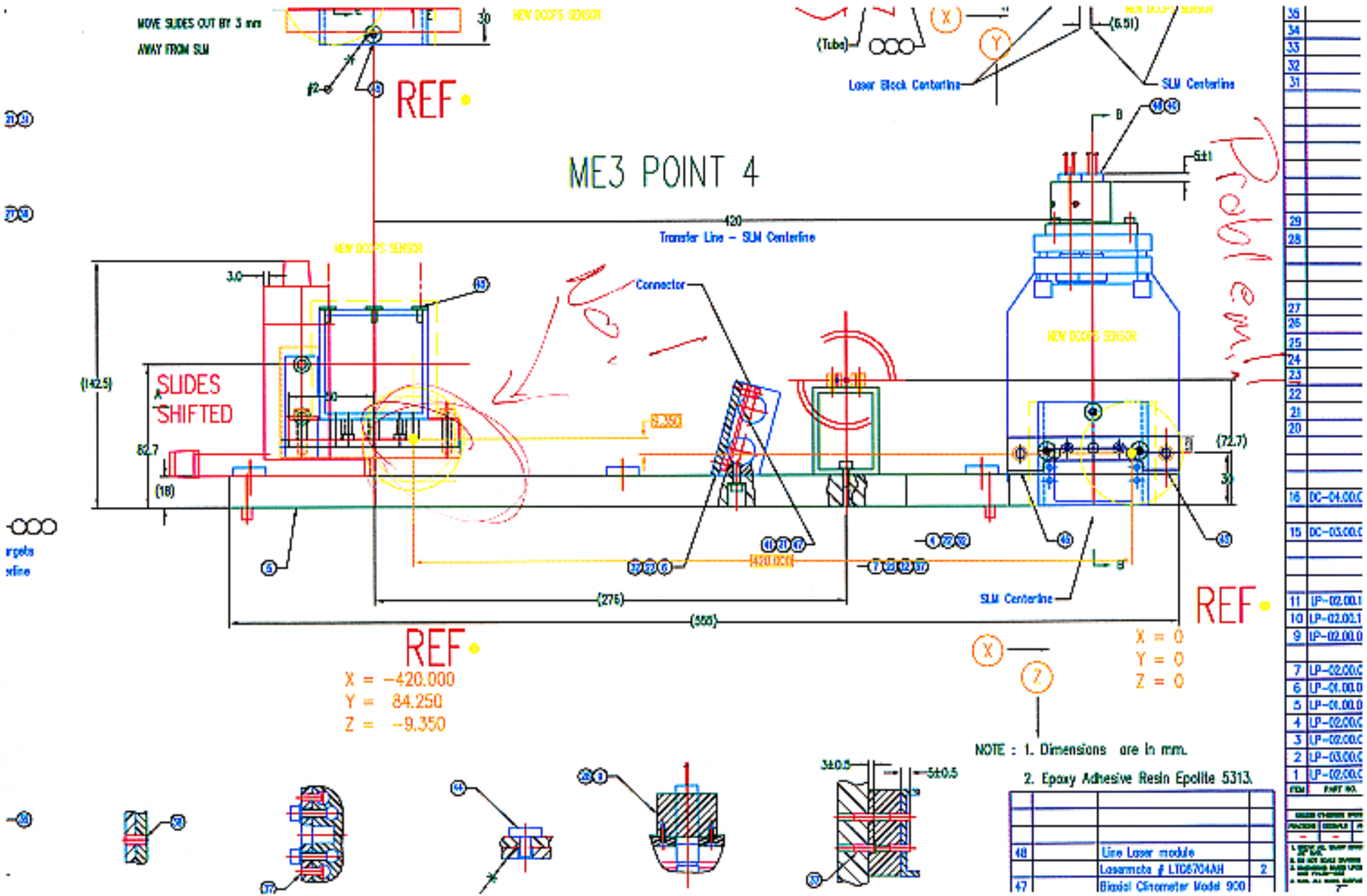

MOVE SLIDES OUT BY 3 mm
AWAY FROM SLM
NEW DOOPS SENSOR
REF
ME3 POINT 4
Laser Block Centerline
SLM Centerline
(Tube)
(6.51)
420
Transfer Line – SLM Centerline
Connector
SLIDES SHIFTED
(142.5)
82.7
(18)
3.0
(72.7)
(276)
(555)
420.000
SLM Centerline
REF
X = −420.000
Y = 84.250
Z = −9.350
X = 0
Y = 0
Z = 0
NOTE : 1. Dimensions are in mm.
2. Epoxy Adhesive Resin Epolite 5313.
3±0.5
5±0.5
48 Line Laser module
Lasermate # LTG6704AH 2
47 Biaxial Clinometer Model 900
16 DC-04.00.0
15 DC-03.00.0
11 LP-02.00.1
10 LP-02.00.1
9 LP-02.00.0
7 LP-02.00.0
6 LP-01.00.0
5 LP-01.00.0
4 LP-02.00.0
3 LP-02.00.0
2 LP-03.00.0
1 LP-02.00.0
ITEM PART NO.

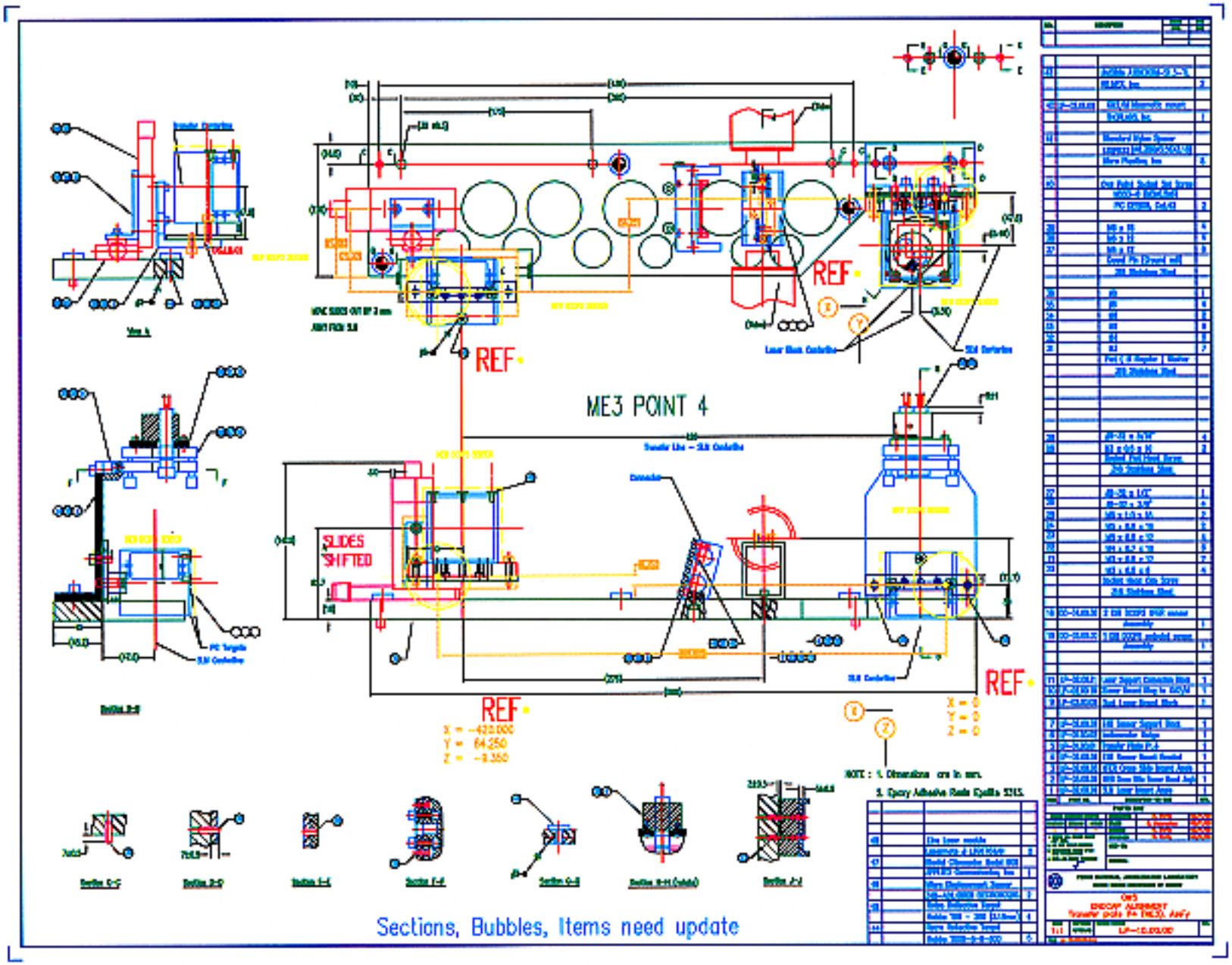
ME3 POINT 4
REF
SLIDES SHIFTED
X = -420.000
Y = 64.250
Z = -8.350
X = 0
Y = 0
Z = 0
NOTE : 1. Dimensions are in mm.
2. Epoxy Adhesive Resin Cyalite 5215.
Sections, Bubbles, Items need update

Correct

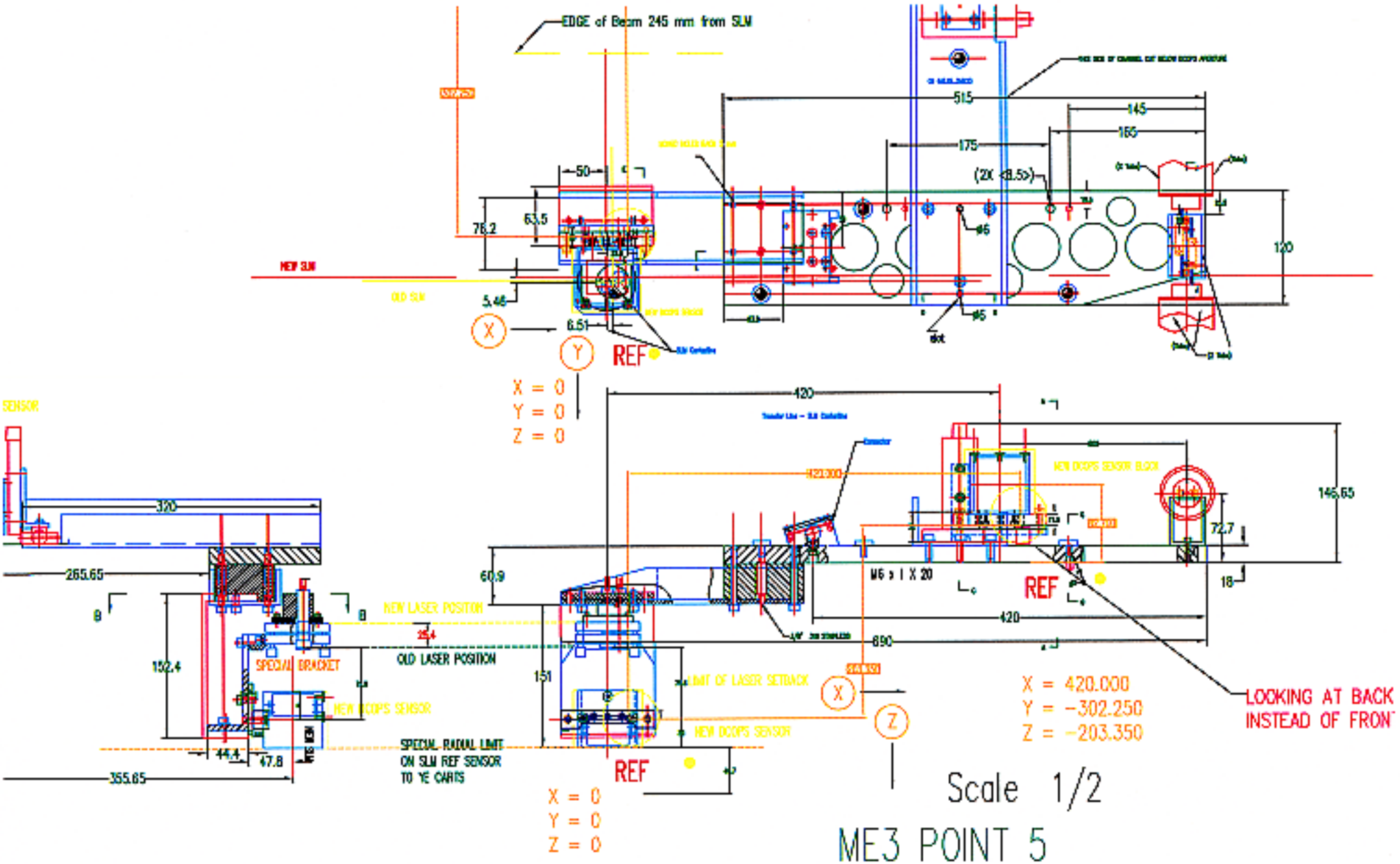
EDGE of Beam 245 mm from SLM
NEW SLM
OLD SLM
REF
X = 0
Y = 0
Z = 0
NEW LASER POSITION
OLD LASER POSITION
SPECIAL BRACKET
NEW DCOPS SENSOR
SPECIAL RADIAL LIMIT ON SLM REF SENSOR TO YE CARTS
LIMIT OF LASER SETBACK
NEW DCOPS SENSOR BLOCK
LOOKING AT BACK INSTEAD OF FRON
X = 420.000
Y = -302.250
Z = -203.350
Scale 1/2
ME3 POINT 5

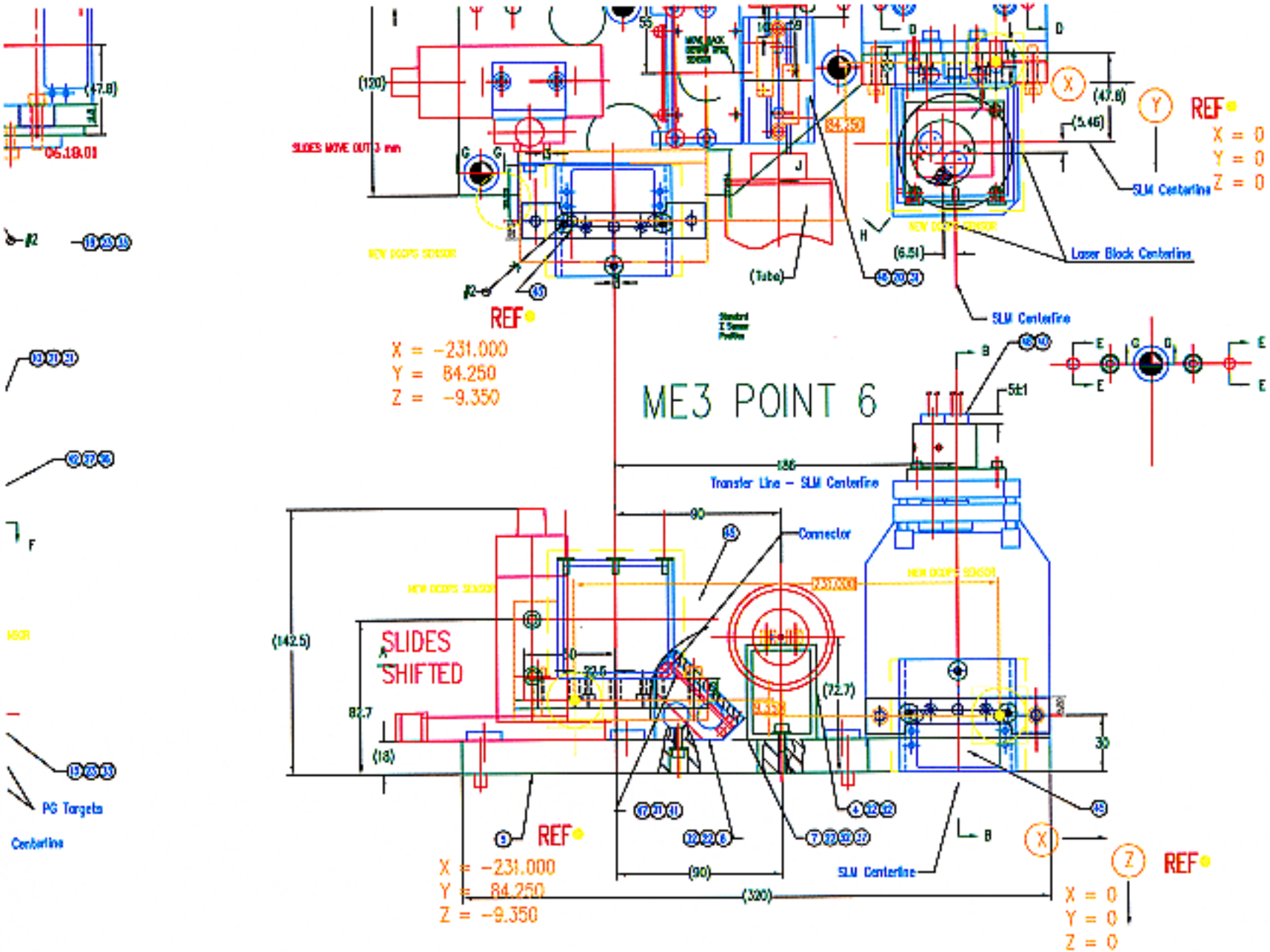

40		Oval Point Socket Se
		MS53-8 (M3x0.5
		PIC DESIGN, Cat.
39		M3 x 16
38		M5 x 12
37		M4 x 12
		Dowel Pin (Ground
		316 Stainless St
36		#5
35		#6
34		M6
33		M5
32		M4
31		M3
		Flat (B Regular)
		316 Stainless St
29		#8-32 x 5/16"
28		M3 x 0.5 x 10
		Socket Flat Head S
		316 Stainless Ste
27		#8-32 x 1/2"
26		#6-32 x 3/8"
25		M6 x 1.0 x 16
24		M5 x 0.8 x 16
23		M5 x 0.8 x 12
22		M4 x 0.7 x 10
21		M3 x 0.5 x 12
20		M3 x 0.5 x 6
		Socket Head Cap Sc
		316 Stainless Ste
16	DC-04.00.00	2 DIR DCOPS XFER
		Assembly
15	DC-03.00.00	1 DIR DCOPS endpoint
		Assembly
11	LP-02.00.11	Laser Support Connecti
10	LP-02.00.10	Laser Mount Ring lo
9	LP-02.00.09	Dual Laser Mount Bl
7	LP-02.00.07	240 Sensor Support B
6	LP-06.00.01	Inclinometer Wedge

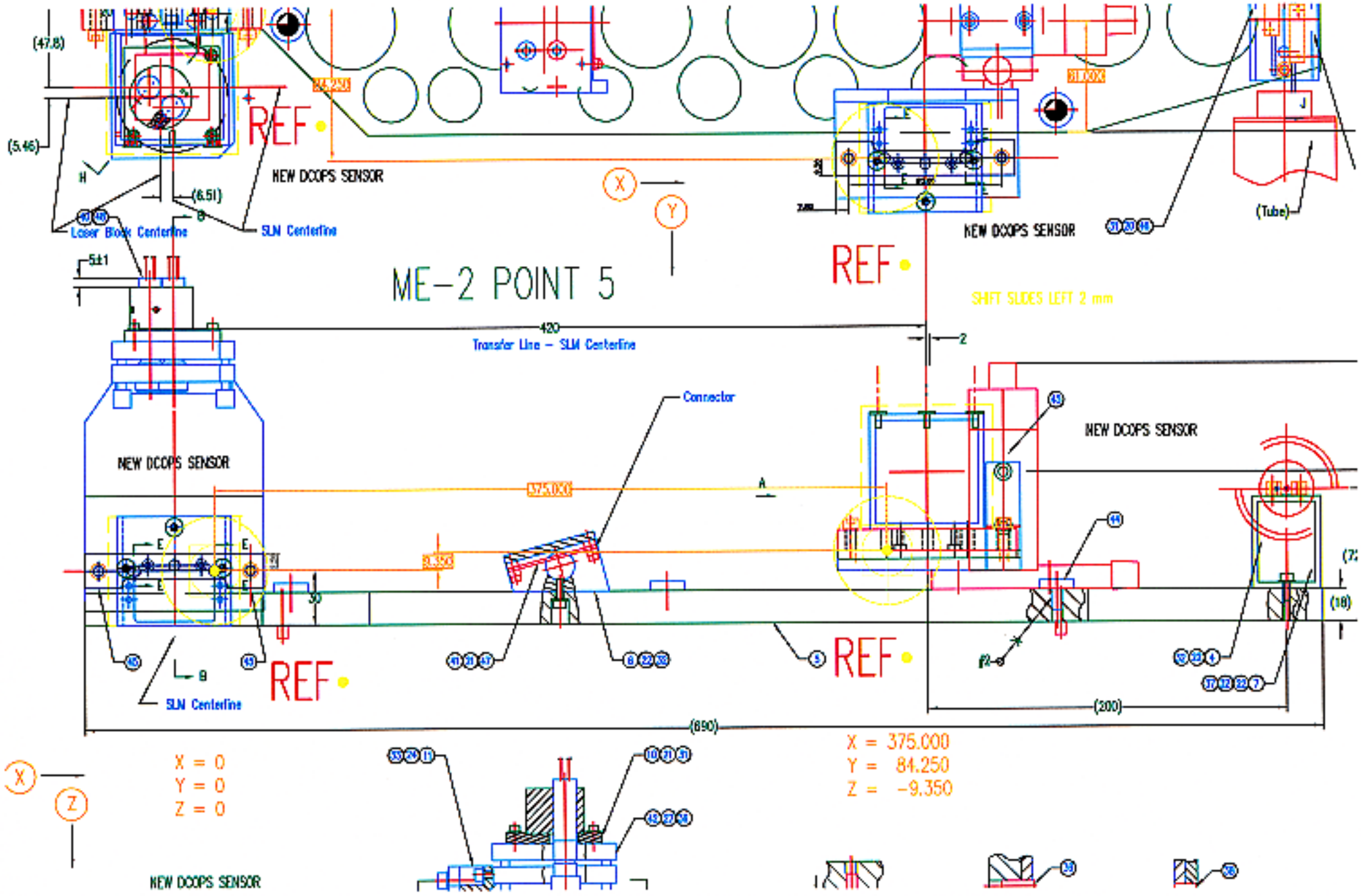
ME-2 POINT 5
REF
NEW DCOPS SENSOR
Laser Block Centerline
SLN Centerline
Transfer Line – SLN Centerline
Connector
SHIFT SLIDES LEFT 2 mm
(Tube)
X = 0
Y = 0
Z = 0
X = 375.000
Y = 84.250
Z = -9.350

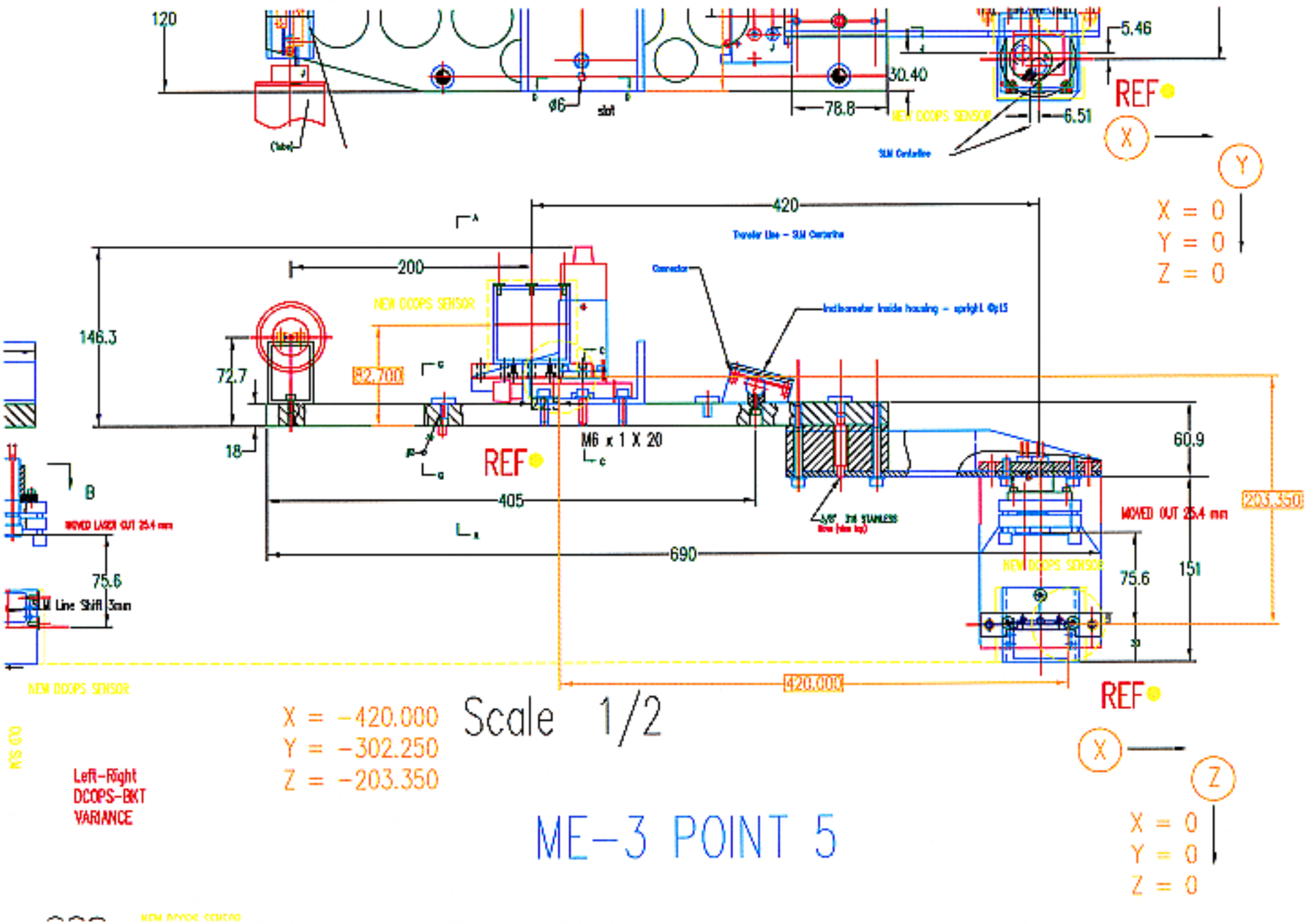

120
5.46
30.40
78.8
6.51
REF
X
Y
X = 0
Y = 0
Z = 0
420
200
146.3
72.7
82.700
18
M6 x 1 X 20
REF
405
690
60.9
203.350
MOVED OUT 25.4 mm
75.6
151
75.6
420.000
REF
X = -420.000
Y = -302.250
Z = -203.350
Scale 1/2
Left-Right
DCOPS-BKT
VARIANCE
ME-3 POINT 5
X
Z
X = 0
Y = 0
Z = 0

PT 1

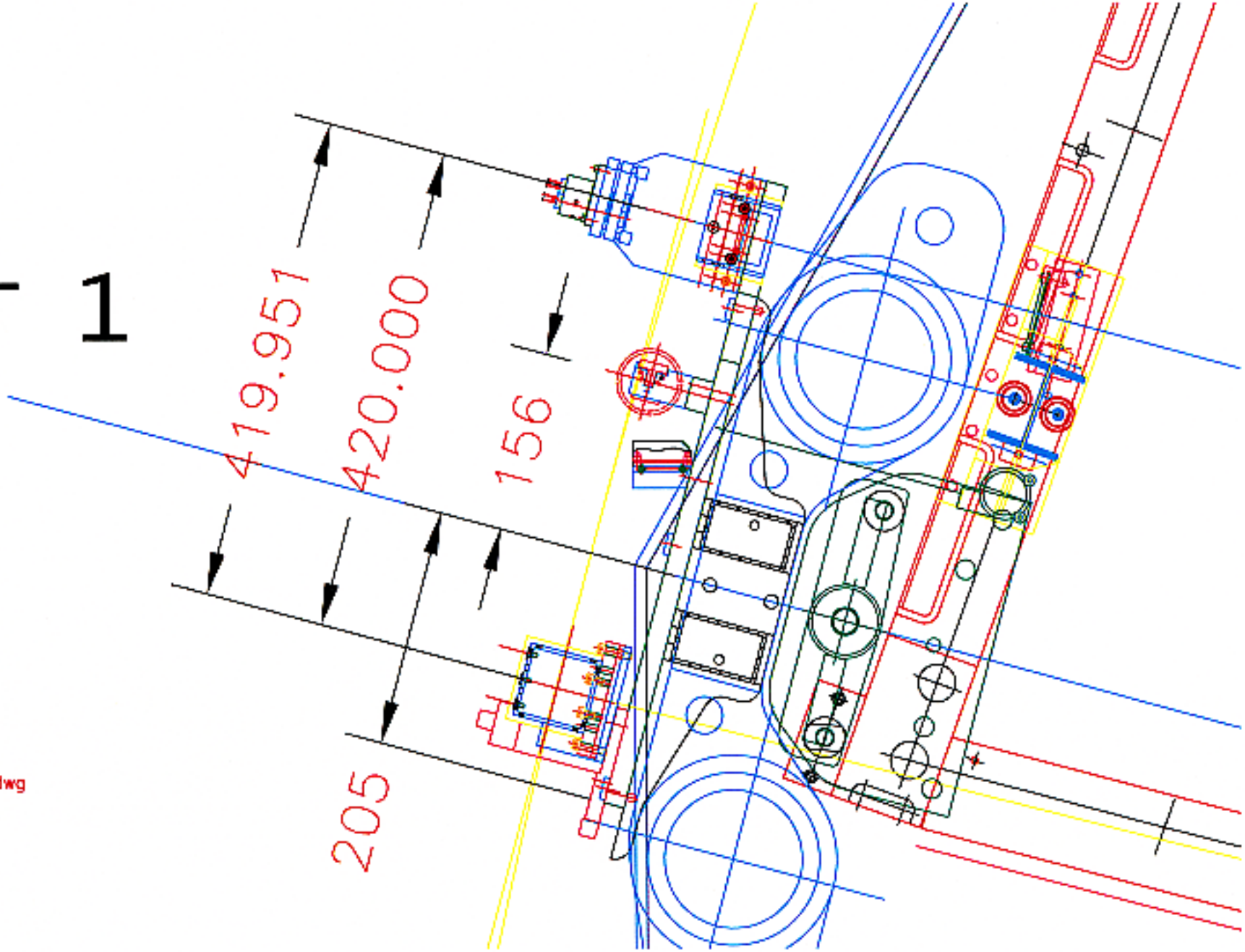

ME2-gap.dwg

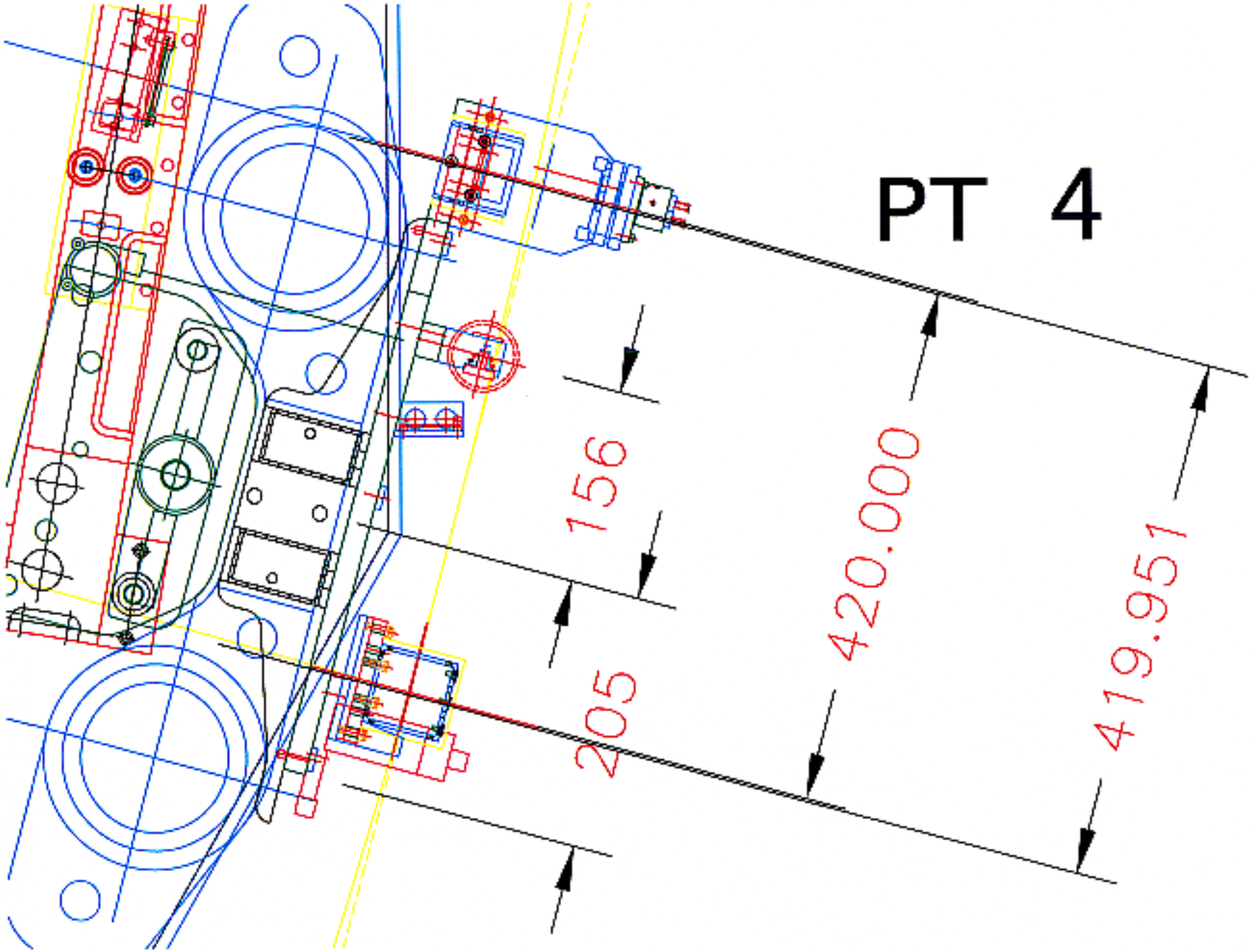

ME2-gap.dwg

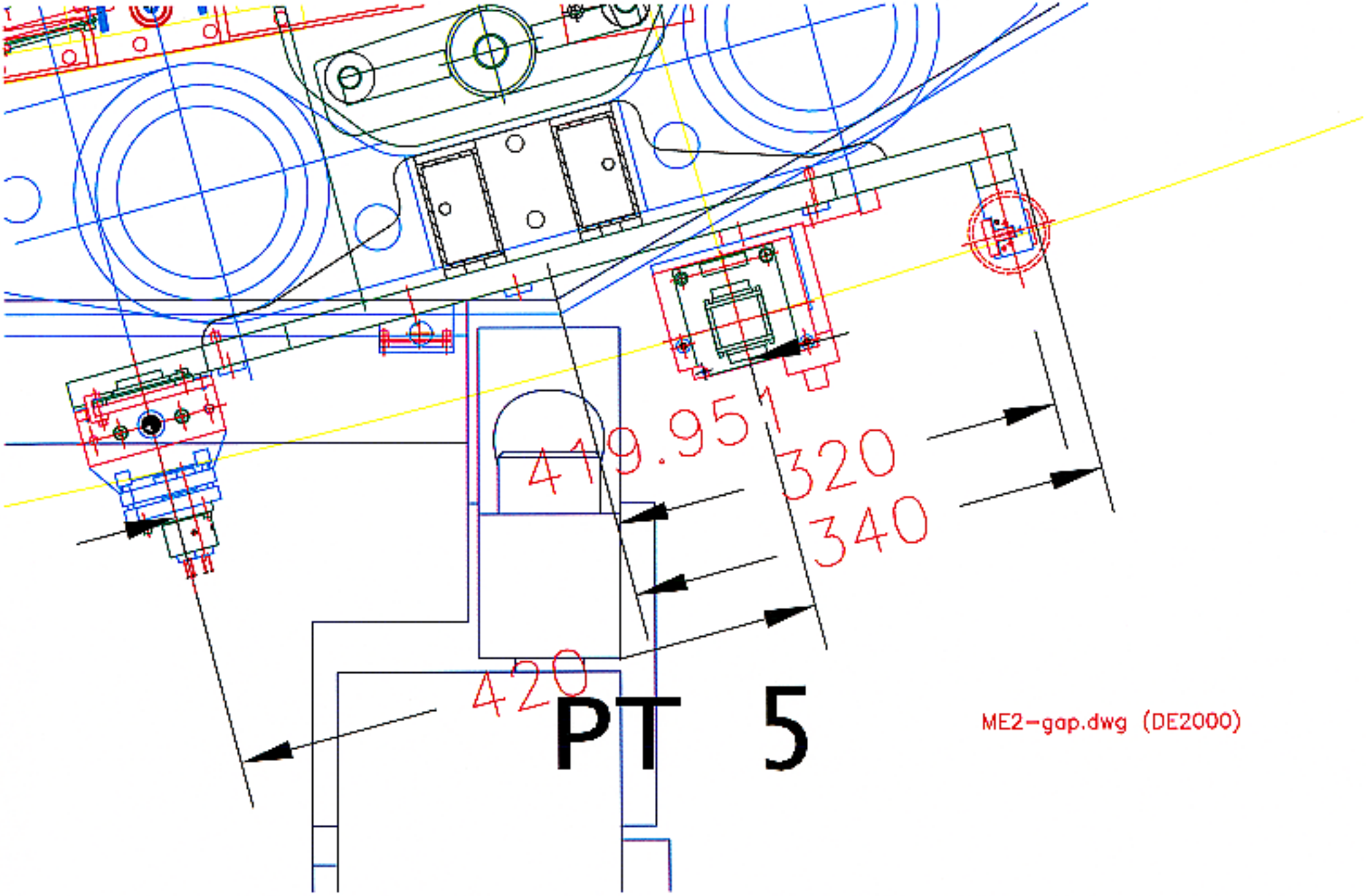
419.951
320
340
420
PT 5
ME2-gap.dwg (DE2000)