Fermilab	**Particle Physics Division** **Mechanical Department**

Engineering note number:	148	Date:	01/30/2004

Experiment	**NuMI**
Project	Penetration Strip Line Lifting Fixture
Author(s)	Rafael Silva (FNAL)
Reviewer(s)	Ang Lee (FNAL)
Abstract	Structural Analysis of Penetration Strip Line Lifting Fixture.

Summary

1 Structural Analysis
- 1.1 Allowable Stresses
  - 1.1.1 Hand Calculations
  - 1.1.2 Finite Element Analysis
- 1.2 Analysis of Penetration Strip Line
  - 1.2.1 Overhang from channel
  - 1.2.2 Strongback channel
- 1.3 Analysis of Penetration Strip Line Lifting Fixture
  - 1.3.1 Round bar
  - 1.3.2 Tube
  - 1.3.3 Vertical plates
  - 1.3.4 Shoulder screws
- 1.4 F.E.A.
  - 1.4.1 Model
  - 1.4.2 Parameters Used
  - 1.4.3 Boundary Conditions
  - 1.4.4 Results
- 1.5 Analysis Of Connections
  - 1.5.1 Welded Connections
    - 1.5.1.1 Round bar
    - 1.5.1.2 Tube

2 Drawings

1 Structural Analysis

This fixture was analyzed to verify compliance with ANSI/ASME B30.20-1985 “Bellow-the-Hook Lifting Devices” standard and 1987 addenda. The two basic design recommendations of this standard and its addenda are:

- Minimum design factor of 3 over the rated load, based on yield strength (20-1.22, p.21) and
- Load test with 125% of the rated load (20-1.4.2, p.22).

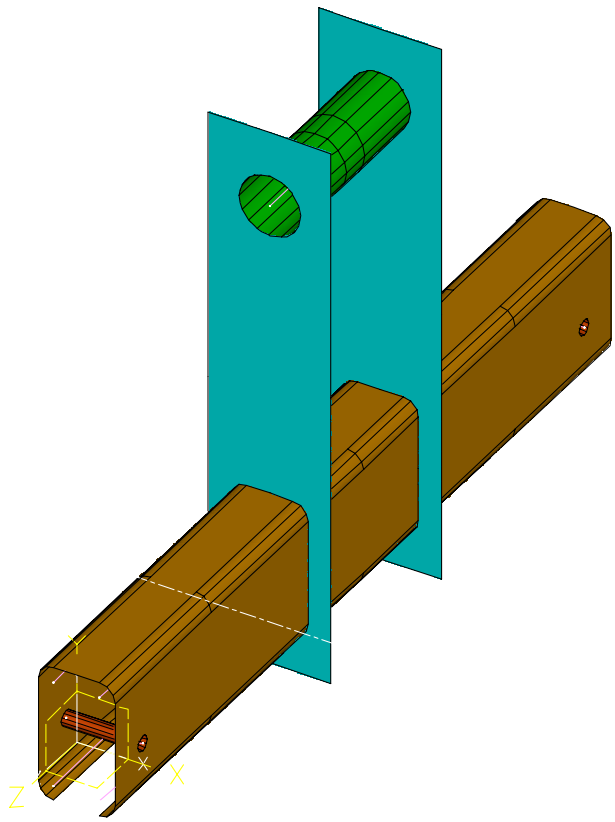

1.1 Allowable Stresses

1.1.1 Hand Calculations

Stresses and Stability - individual stress components should be in accordance with the most stringent of the following codes:
ASME B30.20, AA or AISC/ASD (whichever applicable)

1.1.2 Finite Element Analysis

Stresses:
Maximum peak Von Mises stresses (nodal averaging) < 1/3 of the Yield Strength (based on ASME B30.20).
Maximum peak shear stresses (nodal averaging) < 1/6 of the Yield Strength (based on ASME B30.20 and strength of materials theory).

This is very conservative, since localized stresses can be linearized and peak stresses maybe discarded. Nonetheless, it is safe.

Stability - if compressive forces are present:
Buckling Load Factor (linear buckling) > 5 (see note below).

Published safety factors for buckling vary according to the application. A safety factor greater than 5 is comfortably above what is recommended by some very accepted references as, for instance, the ASME pressure vessel code (see sec. II, appendix 3, item 3-600 (c) (1), p.705). It addresses axial compression of thin cylinders which is experimentally known to be one of the cases that most diverges from buckling theories. Another example is the Aluminum Association standard (see tb. 3.3.3, p.17), which covers aluminum structures.

For 36 ksi plates and rod:	1/3 of Yield = 12.0 ksi;	1/6 of Yield = 6.0 ksi
For 46 ksi tube:	1/3 of Yield = 15.3 ksi;	1/6 of Yield = 7.7 ksi
For 84 ksi shoulder screws:	1/3 of Yield = 28.0 ksi;	1/6 of Yield = 14.0 ksi

1.2 Analysis of Penetration Strip Line

The most severe loading occurs when the strip line is horizontal. The total weight (penetration strip line + channels) is 4,300lb. The penetration strip line lifting arrangement is shown on drawing # ME-431563. The strip line is made out of 6061-T6 aluminum and the channel is ASTM A36 carbon steel.

1.2.1 Overhang from channel

The strip line bars are 12 inches high and have a thickness of 3/8" or 5/16", depending on the region.

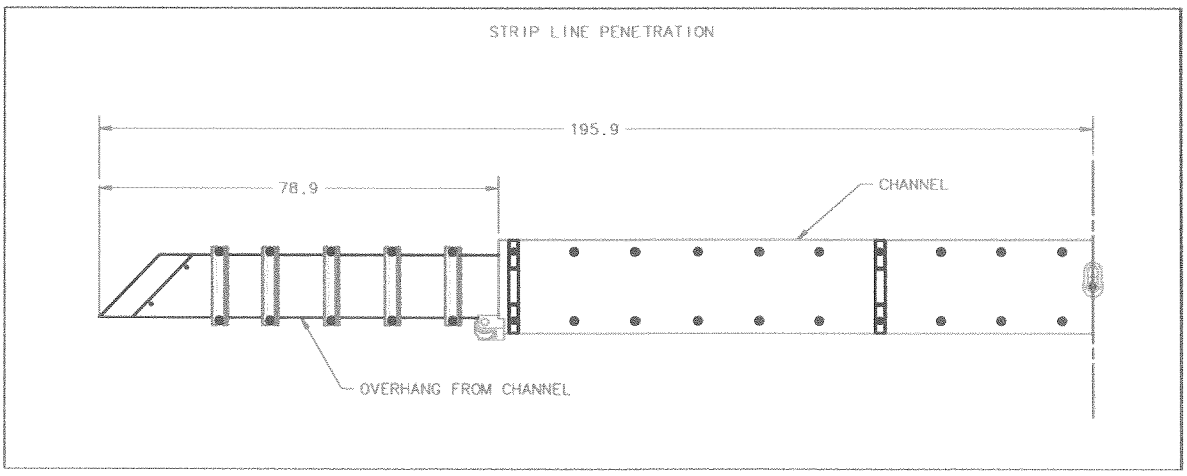

AA, 1996, p.40, Tb. 3.3.27, Spec.13, compression in solid rectangular beams bent about the strong axis, with dimensions in inches and stresses in ksi:

$d := 12$ $\qquad t := \frac{5}{16}$ $\qquad L_b := 78.9$

$\frac{d}{t} \cdot \sqrt{\frac{L_b}{d}} = 98.5$ $\qquad$ So: $\qquad F_a := \frac{11400}{\left(\frac{d}{t}\right)^2 \cdot \left(\frac{L_b}{d}\right)}$

$\boxed{F_a = 1.2}$

Disregarding the strengthening effect of the clamps and assuming the overhang as a cantilever b with distributed load:

$b := \frac{5}{16}$ $\qquad h := 12$ $\qquad I := \frac{b \cdot h^3}{12}$ $\qquad I = 45$

$$S := \frac{I}{\left(\frac{h}{2}\right)} \qquad S = 7.5$$

$$\rho := .098 \qquad b_{max} := \frac{3}{8} \qquad w := b_{max} \cdot h \cdot \rho \qquad w = 0.441$$

$$l := 78.9 \qquad \text{and} \qquad E := 10000000$$

Maximum deflection in inches:

$$\delta_{max} := \frac{w \cdot l^4}{8 \cdot E \cdot I} \qquad \boxed{\delta_{max} = 0.005}$$

Maximum moment in kips.in:

$$M_{max} := \frac{w \cdot l^2}{2 \cdot 1000} \qquad M_{max} = 1.373$$

Maximum stresses in ksi:

$$\sigma_{max} := \frac{M_{max}}{S} \qquad \boxed{\sigma_{max} = 0.2}$$

σ_{max} (0.2ksi) < F_a (1.2ksi), hence the overhang is ***OK***.

4

1.2.1 Strongback channel

ASTM A36 channel, MC 18 x 42.7, 234 inches long.

Load: strip line (80 lb/ft x 1/12 ft/in x 389 in = 2,600 lb) +
own weight (42.7 lb/ft x 1/12 ft/in x 234 in x 2 = 1665 lb) = 4,265 lb.

Considering each channel separately without the strengthening effect of the connections between the channels and strip line bars and assuming half of it behaving like a cantilever beam:

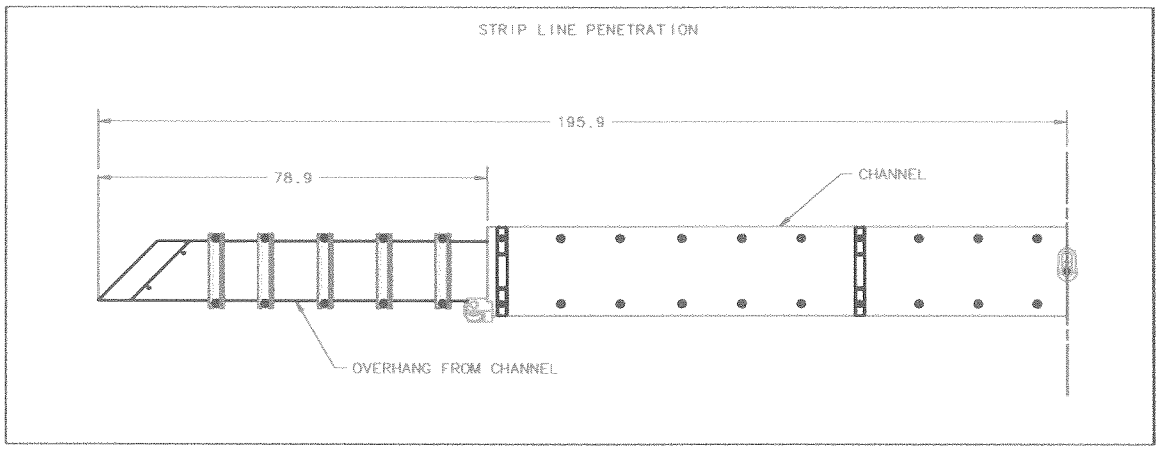

Dimensions and properties of channel, AISC/ASD, 9th ed., p.1-42 and 1-43:

$b := 3.950$ $\quad t := \frac{5}{8}$ $\quad \frac{b}{t} = 6.3$

$h := 15.25$ $\quad t_w := .450$ $\quad \frac{h}{t_w} = 33.9$

$d := 18$ $\quad A_f := 12.6$ $\quad \frac{d}{A_f} = 1.4$

$I := 554$ $\quad S := 61.6$ $\quad b_f := b$

ASTM A36 mechanical properties:

Yield strength (ksi): $F_y := 36$ $\quad$ Elastic Modulus (psi): $E := 29000000$

Moment created by the overhang (kips-in):

$$P_s := \frac{\left(\frac{80}{12}\right)\cdot 78.9}{2} \qquad P_s = 263.0$$

$$l_s := 195.9$$

$$M_s := \frac{P_s \cdot l_s}{1000} \qquad M_s = 51.5$$

Moment created by channel plus stripline not overhanging (kips-in):

$$w_c := \frac{\left[42.7 + \left(\frac{80}{2}\right)\right]}{12}$$

$$l_c := \frac{234}{2} \qquad l_c = 117.0$$

$$M_c := \frac{w_c \cdot l_c^{\,2}}{1000 \cdot 2} \qquad M_c = 47.2$$

$$M_{total} := M_s + M_c \qquad M_{total} = 98.7$$

Max. deflection, inches:

$$x := l_s - l_c \qquad x = 78.9$$

$$\delta_{max} := \frac{P_s \cdot \left(2 \cdot l_s^{\,3} + x^3 - 3 \cdot l_s^{\,2} \cdot x\right)}{6 \cdot E \cdot I} + \frac{w_c \cdot l_c^{\,4}}{8 \cdot E \cdot I} \qquad \delta_{max} = 0.028$$

Max. tensile and compressive stresses, ksi:

$$\sigma_{max} := \frac{M_{total}}{S} \qquad \boxed{\sigma_{max} = 1.6}$$

Shear load, kips: $v := \frac{P_s + w_c \cdot l_c}{1000} \qquad v = 1.1$

Max. shear stresses, ksi: $\tau_{max} := \frac{v}{A_f}$ $\boxed{\tau_{max} = 0.1}$

Checking for compactness, AISC/ASD, 9th ed., p.5-36:

Limiting Width-Thickness ratios, flange, line 1:

Compact: $\frac{65}{\sqrt{F_y}} = 10.8$ Noncompact: $\frac{95}{\sqrt{F_y}} = 15.8$

As b/t (6.3) < (10.8) 65/ $\sqrt{F_y}$, flange is compact.

Limiting Width-Thickness ratios, web, line 10:

Compact: $\frac{640}{\sqrt{F_y}} = 106.7$ Noncompact: $\frac{760}{\sqrt{F_y}} = 126.7$

As h/t_w (33.9) < (106.7) 640/ $\sqrt{F_y}$, web is compact.

<u>As web and flange are compact, hence the channel is compact.</u>

Allowable stresses, bending, AISC/ASD, 9th ed., p.5-45:

Unsupported length of the compression flange, feet: $L_b := \frac{234}{12}$ $L_b = 19.5$

Equation F1-2, L_c: $\frac{76 \cdot b_f}{12 \cdot \sqrt{F_y}} = 4.2$ or $\frac{20000}{12 \cdot \left(\frac{d}{A_f}\right) \cdot F_y} = 32.4$

As L_b(19.5) > (4.2) L_c, F1.3, p. 5-46 applies and it specifies eq. F1-8, p.5-47 as the allowable compressive stress, ksi:

$C_b := 1$ (C_b may conservatively be taken as unity for cantilever beams, p.5-47, last line).

$F_b := \frac{12 \cdot 10^3 \cdot C_b}{\left(\frac{l_c \cdot d}{A_f}\right)}$ $F_b = 71.8$

or

$F_b := 0.60 \cdot F_y$ $\boxed{F_b = 21.6}$

For shear, F4, p.5-49, ksi:

$$\frac{380}{\sqrt{F_y}} = 63.3$$

As h/t_w (33.9) < (63.3) 380/ $\sqrt{F_y}$, allowable comes from eq. F4-1:

$F_v := 0.40 \cdot F_y$ $\boxed{F_v = 14.4}$

$$\left.\begin{array}{l} \sigma_{max}\ (1.6\ \text{ksi}) < (21.6\ \text{ksi})\ F_b \\ \\ \tau_{max}\ (0.1\ \text{ksi}) < (14.4\ \text{ksi})\ F_v \end{array}\right\} \Rightarrow \text{Channel is } \underline{\textbf{\textit{OK}}}.$$

1.3 Analysis of Penetration Strip Line Lifting Fixture

The penetration strip line lifting fixture is shown on drawing # ME-431607. It must comply with ANSI/AMSE B30.20, Below the Hook Lifting Devices. The total load is 4,300 lb and the fixture will be rated to 5,000 lb.

1.3.1 Round bar

As per drawing MB-431610, it is a 3" dia. round ASTM A36 solid steel bar. Conservatively, it will be considered as a beam simply supported and loaded at the center, with a 6" span. With the load in kips, span in in and moment in kips-in:

$P := 5$ $\quad l := 6$ $\quad d := 3$

$M_{max} := \frac{P \cdot l}{4}$ $\quad M_{max} = 7.5$

Properties:

$A := \frac{\pi \cdot d^2}{4}$ $\quad A = 7.1$

$I := \frac{\pi \cdot d^4}{64}$ $\quad I = 4.0$

$S := \frac{\pi \cdot d^3}{32}$ $\quad S = 2.7$

ASTM A36 mechanical properties:

Yield strength (ksi): $F_y := 36$ $\quad$ Elastic Modulus (psi): $E := 29000000$

Allowable stresses, ksi:

$F_a := \frac{F_y}{3}$ $\quad \boxed{F_a = 12.0}$

$\delta_{max} := \frac{P \cdot 1000 \cdot l^3}{48 \cdot E \cdot I}$ $\quad \delta_{max} = 0.0002$

$\sigma_{max} := \frac{M_{max}}{S}$ $\quad \boxed{\sigma_{max} = 2.8}$

$$\tau_{max} := \frac{P}{A} \qquad \boxed{\tau_{max} = 0.7}$$

$$\left.\begin{array}{l} \sigma_{max}\,(2.8\ \text{ksi}) < (12.0\ \text{ksi})\ F_a \\ \\ \tau_{max}\,(0.7\ \text{ksi}) < (12.0\ \text{ksi})\ F_a \end{array}\right\} \Rightarrow \text{Round bar is } \underline{\textbf{\textit{OK}}}.$$

1.3.2 Tube

As per drawing MB-431608, it is a 3" x 5" x 1/2" wall ASTM A500 Gr. B steel tube. The bottom wall of the tube, which is cut at the extremities, will be disregarded.
ASTM A500 Gr. B mechanical properties:

Yield strength (ksi): $F_y := 46$ Elastic Modulus (psi): $E := 29000000$

Allowable stresses, ksi:

$F_a := \frac{F_y}{3}$ $\boxed{F_a = 15.3}$

Area properties from I-DEAS:

$A := 5.7$ $I := 12.7$

$S := \frac{I}{2.85}$ $S = 4.5$

With the load in kips, span and deflection in inches, moment in kips-in and stresses in ksi:

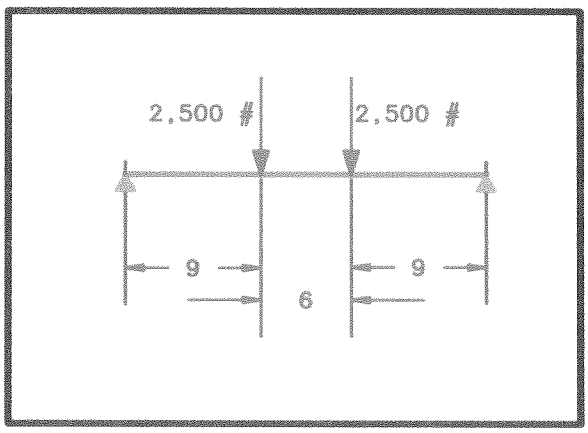

$a := 9$ $l := 24$

$P := 2.5$

$M := P \cdot a$ $M = 22.5$

$\sigma_{max} := \frac{M}{S}$ $\boxed{\sigma_{max} = 5.0}$

$\tau_{max} := \frac{P}{A}$ $\boxed{\tau_{max} = 0.4}$

$\delta_{max} := \frac{P \cdot a}{24 \cdot E \cdot I} \cdot \left(3 \cdot l^2 - 4 \cdot a^2\right)$ $\delta_{max} = 3.6 \times 10^{-6}$

σ_{max} (5.0 ksi) < (15.3 ksi) F_a
τ_{max} (0.4 ksi) < (15.3 ksi) F_a
$\Rightarrow$ Tube is ***OK***.

11

Checking areas around the holes:

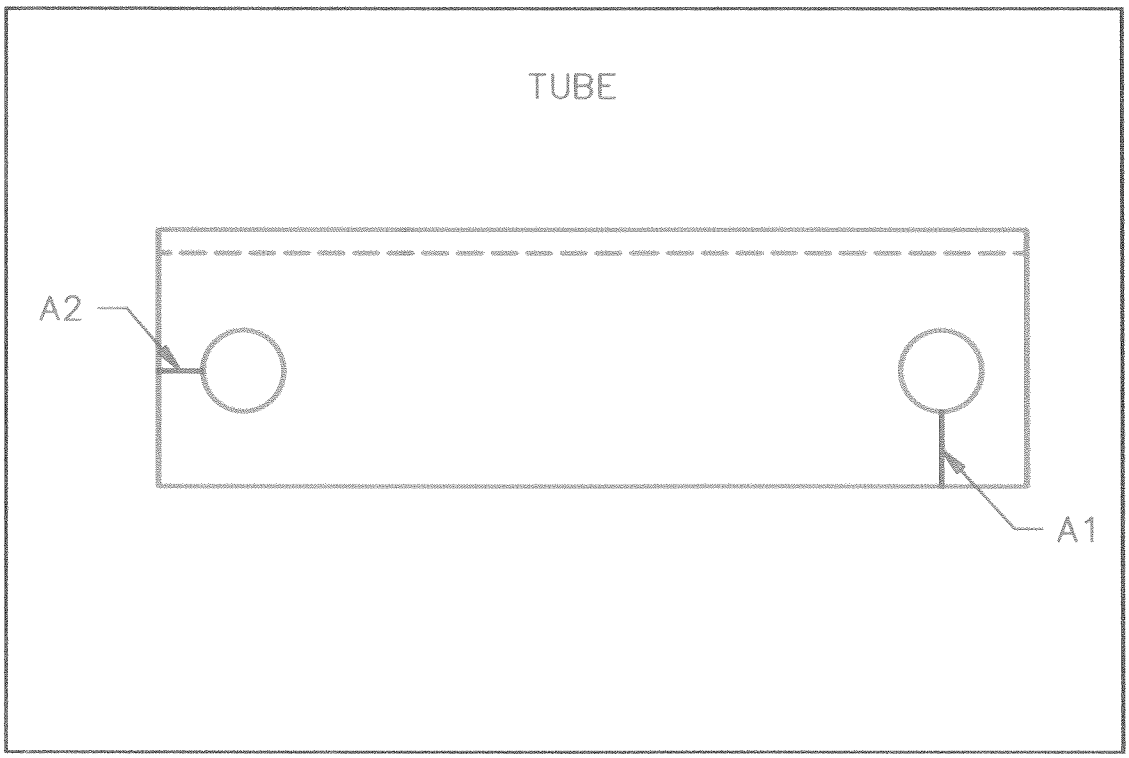

Area A1, which is in shear, is conservatively assumed to be under the hole.

$A1 := 1.469 \cdot .5$ $\qquad A1 = 0.7$

$A2 := .969 \cdot .5$ $\qquad A2 = 0.5$

Shear in A1: $\qquad \tau_{A1} := \dfrac{\frac{P}{2}}{A1} \qquad \tau_{A1} = 1.7$

Tension in A2: $\qquad \sigma_{A2} := \dfrac{\frac{P}{2}}{A2} \qquad \sigma_{A2} = 2.6$

$$\left.\begin{array}{l} \sigma_{A2}\,(2.6\text{ ksi}) < (15.3\text{ ksi})\,F_a \\ \\ \tau_{A1}\,(1.7\text{ ksi}) < (15.3\text{ ksi})\,F_a \end{array}\right\} \Rightarrow \text{Area around the holes is } \underline{\textbf{\textit{OK}}}.$$

Bearing stresses on holes are 20% below yield (as per following Roark and Young on TK solver calculations), which is also OK.

Checking for local deformation of tube where the vertical plates are attached, consider a beam fixed with the length of the horizontal surface of the tube (1.78"), the width of the vertical plates (1/2") plus the welds (2 x 3/8"), under 2,500 lb.

$b_L := .5 + 2 \cdot \left(\frac{3}{8}\right)$ $\quad b_L = 1.3$ $\quad h_L := .5$

$A_L := b_L \cdot h_L$ $\quad A_L = 0.6$

$I_L := \frac{b_L \cdot h_L^3}{12}$ $\quad I_L = 0.0$

$S_L := \frac{I_L}{\left(\frac{h_L}{2}\right)}$ $\quad S_L = 5.2 \times 10^{-2}$

$L := 1.78$

$M_L := \frac{P \cdot L}{12}$ $\quad M_L = 0.4$

$\delta_{Lmax} := \frac{P \cdot L^3}{384 \cdot E \cdot I_L}$ $\quad \delta_{Lmax} = 9.7 \times 10^{-8}$

$\sigma_{Lmax} := \frac{M_L}{S_L}$ $\quad \sigma_{Lmax} = 7.1$

σ_{Lmax} (7.1 ksi) < (15.3 ksi) F_a $\Rightarrow$ Local stresses on tube are ***OK***.

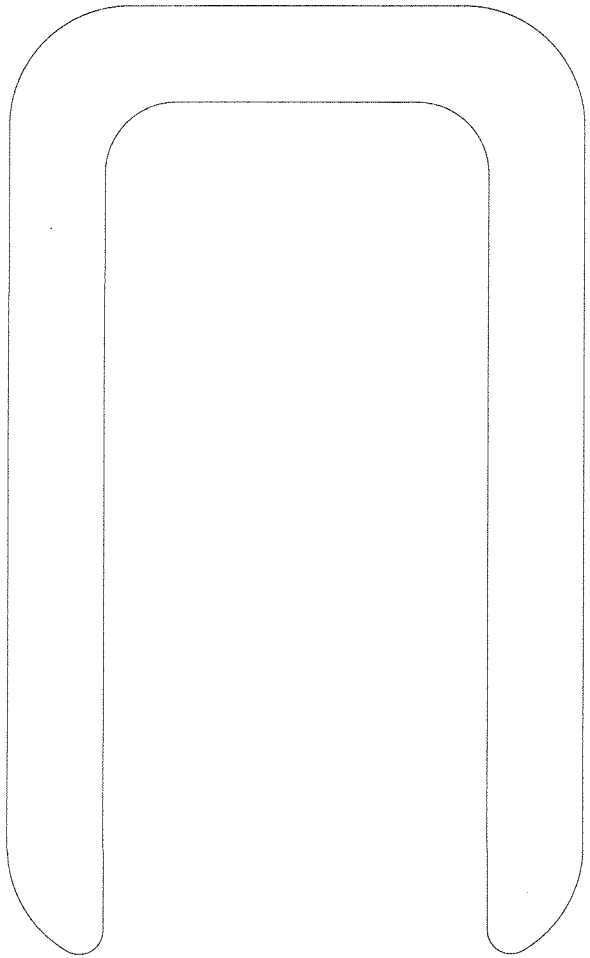

Area=5.70948555e+00

Ixcg=1.27455995e+01
Iycg=7.65861777e+00

Kxcg=1.49410681e+00
Kycg=1.15818173e+00

Ipolar=2.04042172e+01

Plotted by rafael on 17-Dec-03 , File: stripline_pene_liftfix_horiz_support.pff

Bearing stresses on tube holes caused by pins

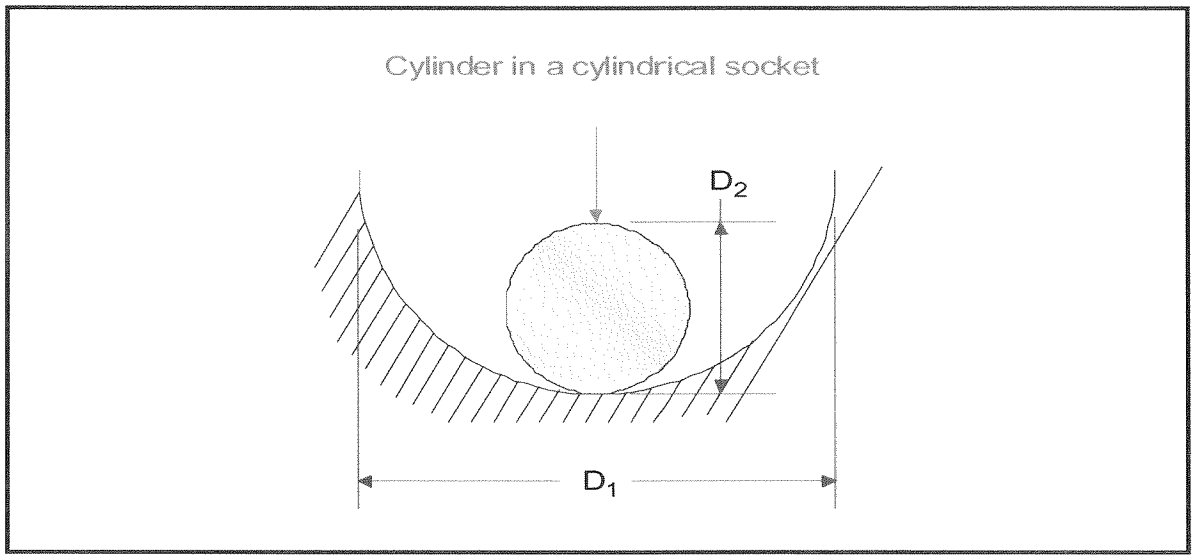

Status	Input	Name	Output	Unit	Comment
					2c. Cylinder In A Cylindrical Socket
		Case	'_2c		Table 14.1: Roark's Formulas
					Stress And Strain Due To Pressure On
					Or Between Elastic Bodies
					CYLINDER:
		matlnum2			Material number
		matl2			Material description
	2.9E7	E2		psi	Modulus of elasticity
	0.3	nu2			Poisson's ratio
	1	D2		in	Diameter
	0.5	L		in	Length
					SOCKET:
		matlnum1			Material number
		matl1			Material description
	2.9E7	E1		psi	Modulus of elasticity
	0.3	nu1			Poisson's ratio
	1.062	D1		in	Diameter
	1250	P		lbf	Total load
		p	2500	lbf/in	Load per unit length
		sigcmx	38483.077	psi	Maximum compressive stress
		b	8.2945551E-2	in	Width of rectangular contact area
		CE	6.27586206896552E-8	1/psi	Simplifying constant
		KD	17.1290322580645	in	Form factor

1.3.3 Vertical plates

As per drawing MB-431609, they are 4" x 1/2" ASTM A36 steel plates.

ASTM A36 mechanical properties:

Yield strength (ksi): $F_y := 36$ Elastic Modulus (psi): $E := 29000000$

Allowable stresses, ksi:

$$F_a := \frac{F_y}{3} \qquad \boxed{F_a = 12.0}$$

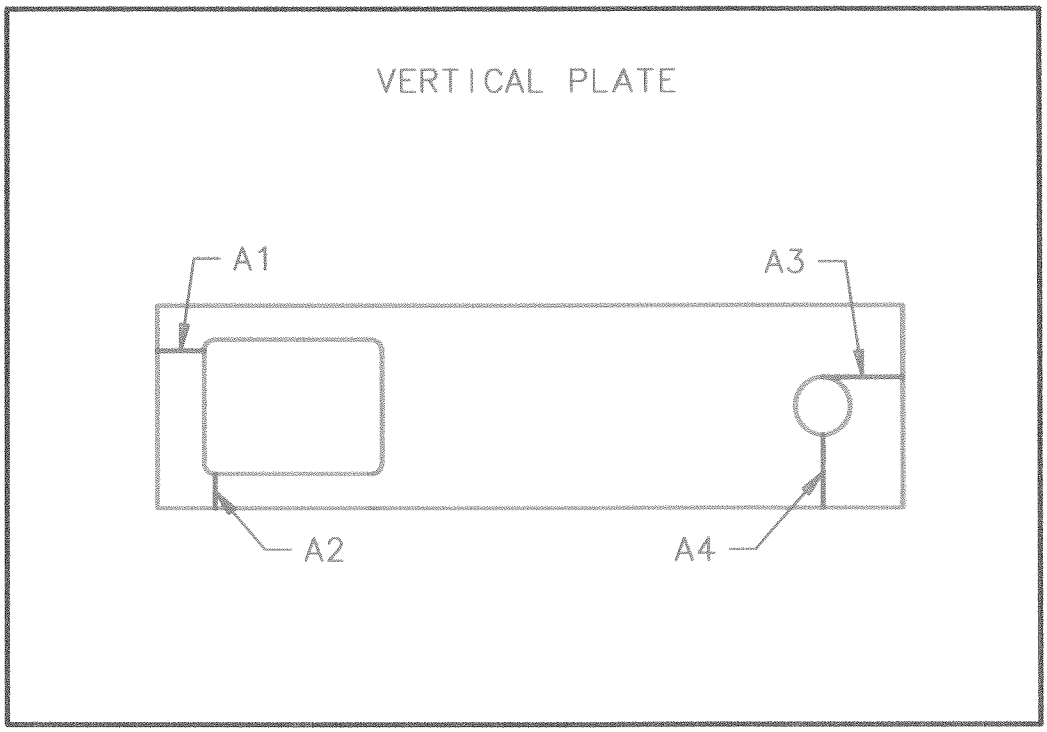

$A1 := 1 \cdot .5$ $A1 = 0.5$

$A2 := .47 \cdot .5$ $A2 = 0.2$

$A3 := 2.5 \cdot .5$ $A3 = 1.3$

$A4 := .47 \cdot .5$ $A4 = 0.2$

$P := 2.5$

Shear in A1: $\tau_{A1} := \frac{\frac{P}{2}}{A1}$ $\tau_{A1} = 2.5$

Shear in A3: $\tau_{A3} := \frac{\frac{P}{2}}{A3}$ $\tau_{A3} = 1.0$

Tension in A2: $\sigma_{A2} := \frac{\frac{P}{2}}{A2}$ $\sigma_{A2} = 5.3$

Tension in A4: $\sigma_{A4} := \frac{\frac{P}{2}}{A4}$ $\sigma_{A4} = 5.3$

$$\left.\begin{array}{l} \sigma_{A2}\,(5.3\text{ ksi}) < (15.3\text{ ksi})\,F_a \\ \sigma_{A4}\,(5.3\text{ ksi}) < (15.3\text{ ksi})\,F_a \\ \\ \tau_{A1}\,(2.5\text{ ksi}) < (15.3\text{ ksi})\,F_a \\ \tau_{A3}\,(1.0\text{ ksi}) < (15.3\text{ ksi})\,F_a \end{array}\right\} \Rightarrow \text{Area around the holes is } \underline{\textbf{\textit{OK}}}.$$

Bearing stresses on circular hole are 50% below yield and 95% below yield on rectangular hole (as per following Roark and Young on TK solver calculations), which are also OK.

There are no significant bending moments transferred from round bar and tube to the plates, as can be confirmed by the FEA.

Bearing Stresses caused by round bar on vertical plate hole

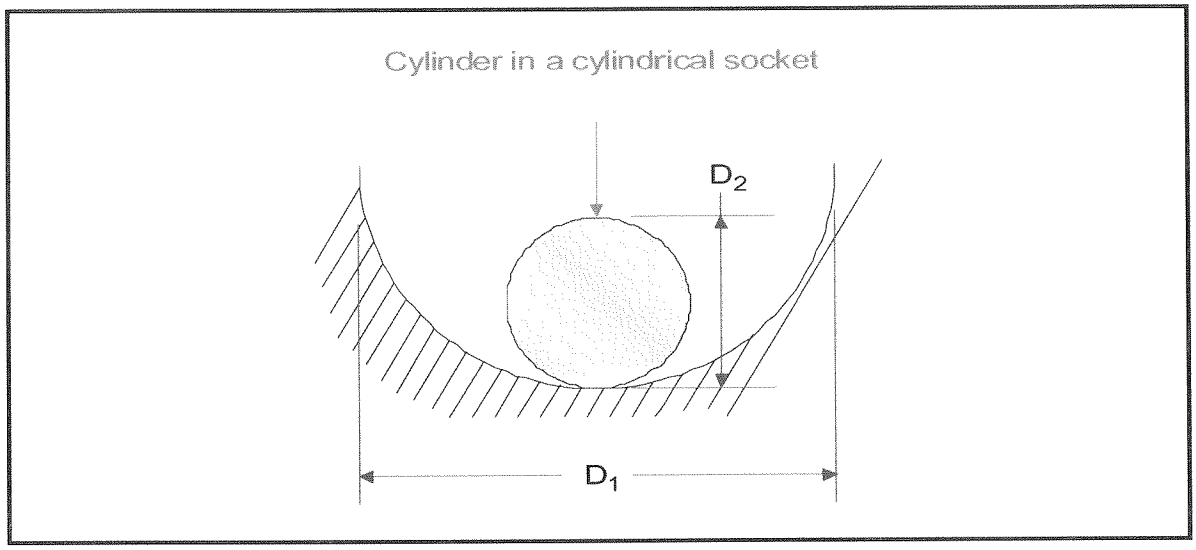

Status	Input	Name	Output	Unit	Comment
					2c. Cylinder In A Cylindrical Socket
		Case	'_2c		Table 14.1: Roark's Formulas
					Stress And Strain Due To Pressure On
					Or Between Elastic Bodies
					CYLINDER:
		matlnum2			Material number
		matl2			Material description
	2.9E7	E2		psi	Modulus of elasticity
	0.3	nu2			Poisson's ratio
	3	D2		in	Diameter
	0.5	L		in	Length
					SOCKET:
		matlnum1			Material number
		matl1			Material description
	2.9E7	E1		psi	Modulus of elasticity
	0.3	nu1			Poisson's ratio
	3.062	D1		in	Diameter
	2500	P		lbf	Total load
		p	5000	lbf/in	Load per unit length
		sigcmx	18504.776	psi	Maximum compressive stress
		b	3.4499202E-1	in	Width of rectangular contact area
		CE	6.27586206896552E-8	1/psi	Simplifying constant
		KD	148.161290322581	in	Form factor

Bearing stresses caused by tube on vertical plates

Rigid block of width 2b across edge of semi-infinite plate; load p = P/t where t is plate thickness

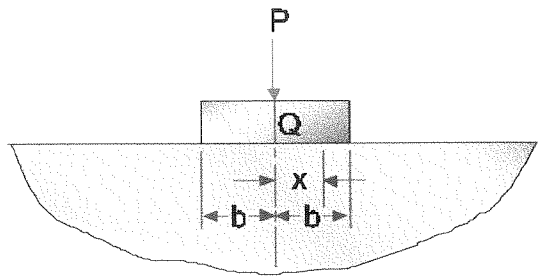

Status	Input	Name	Output	Unit	Comment
					6. Rigid Block Across Edge Of Plate
		Case	'_6		Table 14.1: Roark's Formulas
					Stress And Strain Due To Pressure On
					Or Between Elastic Bodies
		caution	'_		Caution Message
	2500	P		lbf	Load
		p	5000	lbf/in	Load per unit length across thickness of plate
	0.5	t		in	Thickness of plate
	0.89	b		in	Block half-width
	0	x		in	Block center to surface contact point
		sigmac	1788.258	psi	Compressive stress at contact point

1.3.4 Shoulder screws

As per drawing MC-431670, it is a 1" dia. shoulder screw from McMaster-Carr and it follows ASME/ANSI B18.3, which specifies minimum tensile strength of 140 ksi and minimum shear strength of 84 ksi - no yield specification. Conservatively, it will be considered minimum yield strength equal to the minimum shear strength, 84ksi. The screw is a beam simply supported and loaded at the center, with a 2" span. With the load in kips, span in in and moment in kips-in:

$P := 2.5$ $\quad l := 2$ $\quad d := 1$

$M_{max} := \frac{P \cdot l}{4}$ $\quad M_{max} = 1.3$

Properties:

$A := \frac{\pi \cdot d^2}{4}$ $\quad A = 0.8$

$I := \frac{\pi \cdot d^4}{64}$ $\quad I = 0.0$

$S := \frac{\pi \cdot d^3}{32}$ $\quad S = 0.1$

Mechanical properties:

Yield strength (ksi): $F_y := 84$ $\quad$ Elastic Modulus (psi): $E := 29000000$

Allowable stresses, ksi:

$F_a := \frac{F_y}{3}$ $\quad \boxed{F_a = 28.0}$

$\delta_{max} := \frac{P \cdot 1000 \cdot l^3}{48 \cdot E \cdot I}$ $\quad \delta_{max} = 0.0003$

$\sigma_{max} := \frac{M_{max}}{S}$ $\quad \boxed{\sigma_{max} = 12.7}$

$\tau_{max} := \frac{P}{A}$ $\quad \boxed{\tau_{max} = 3.2}$

$$\left.\begin{array}{l}\sigma_{max}\ (12.7\ \text{ksi}) < (28.0\ \text{ksi})\ F_a \\ \\ \tau_{max}\ (3.2\ \text{ksi}) < (28.0\ \text{ksi})\ F_a\end{array}\right\} \Rightarrow \text{Shoulder Screw is } \underline{\textbf{\textit{OK}}}.$$

Shoulder Screws

Technical drawings and 3-D models available for items with this symbol. CAD

For shoulder screw shims, see pages 3009-3010.

About Shoulder Screws

Shoulder screws are one-piece screws with a cylindrical shoulder under the head that serves as a bearing or spacer. They're used for a range of punch and die operations, such as the location and retention of stripper plates, and they also act as a guide in blanking and forming presses. You'll find them used as bearing pins for swing arms, links, and levers; as shafts for cam rolls and other rotating parts; as pivots; and as stud bolts. Shoulder screws are also known as stripper bolts.

Choose ***standard*** or ***precision*** shoulder screws. Precision version (sold on pages 2884 and 2885) has closer tolerances than standard, making them ideal for precise mechanical applications.

Standard Shoulder CAD

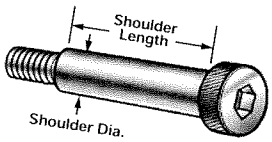

All screws have knurled heads for good gripping. Shoulder tolerances: diameter, −.002" to −.004"; length, +0.005" to −0.005". Head chamfer is 30° to 45°. Tip chamfer is approximately 45°. These screws meet ASME/ANSI B18.3, Class 3A unified coarse thread fit.

Type 316 Stainless Steel—Nonmagnetic, it contains molybdenum for better corrosion resistance than 18-8 stainless steel. Withstands many industrial chemicals and solvents and resists pitting caused by chlorides. Rockwell hardness: B55. Not rated for tensile strength.

18-8 Stainless Steel—Excellent corrosion resistance for chemical, marine, and other rugged environments. This material can be mildly magnetic. Shoulder has a ground finish. Minimum tensile strength is 70,000 psi. Rockwell hardness: B55.

Alloy Steel—Heat-treated A574 alloy steel, with a shoulder that is ground to a highly polished finish. Made in USA, except for nonstandard sizes indicated by a ▲. Head and threads have black finish. Minimum tensile strength is 140,000 psi. Rockwell hardness: C32-43.

Type 316 Stainless Steel

1/4" Shoulder Dia.
Head: Dia. 3/8"; Ht. 3/16"
Thread: 10-24; 3/8" Lg.
Hex Key Size: 7/8"

Shoulder Lg.	Pkg. Qty.		Each★
3/8"	10	97345A531	$3.00
1/2"	10	97345A537	3.23
5/8"	10	97345A539	3.45
3/4"	10	97345A540	3.68
1"	10	97345A542	3.94
1 1/4"	10	97345A556	4.26
1 1/2"	10	97345A561	4.76

5/16" Shoulder Dia.
Head: Dia. 7/16"; Ht. 7/32"
Thread: 1/4"-20; 7/16" Lg.
Hex Key Size: 5/32"

Shoulder Lg.	Pkg. Qty.		Each★
3/8"	10	97345A571	$3.84
1/2"	10	97345A578	4.20
5/8"	10	97345A579	4.31
3/4"	10	97345A581	4.42
1"	10	97345A583	4.81
1 1/4"	10	97345A588	5.03
1 1/2"	10	97345A593	5.60

3/8" Shoulder Dia.
Head: Dia. 9/16"; Ht. 1/4"
Thread: 5/16"-18; 1/2" Lg.
Hex Key Size: 3/16"

Shoulder Lg.	Pkg. Qty.		Each★
3/8"	5	97345A601	$4.52
1/2"	5	97345A619	4.62
5/8"	5	97345A621	4.82
3/4"	5	97345A622	5.02
1"	5	97345A624	5.42
1 1/4"	5	97345A632	5.88
1 1/2"	5	97345A644	6.43
2"	5	97345A656	6.72

1/2" Shoulder Dia.
Head: Dia. 3/4"; Ht. 5/16"
Thread: 3/8"-16; 5/8" Lg.
Hex Key Size: 1/4"

Shoulder Lg.	Pkg. Qty.		Each★
1/2"	5	97345A700	$6.43
5/8"	5	97345A703	6.61
3/4"	5	97345A707	7.08
1"	5	97345A712	7.68
1 1/4"	5	97345A714	8.22
1 1/2"	5	97345A716	8.76
2"	5	97345A720	10.36

18-8 Stainless Steel

1/4" Shoulder Dia.
Head: Dia. 3/8"; Ht. 3/16"
Thread: 10-24, 3/8" Lg.
Hex Key Size: 7/8"

Shoulder Lg.	Pkg. Qty.		Each★
1/4"	10	90298A534	$1.05
3/8"	10	90298A535	1.11
1/2"	10	90298A537	1.14
5/8"	10	90298A539	1.21
3/4"	10	90298A540	1.33
1"	10	90298A542	1.46
1 1/4"	10	90298A544	1.68
1 1/2"	10	90298A546	2.00
1 3/4"	5	90298A547	2.26
2"	5	90298A548	2.62
2 1/4"	5	90298A549	3.15
2 1/2"	5	90298A550	3.23
2 3/4"	5	90298A551	4.04
3"	5	90298A552	4.23

5/16" Shoulder Dia.
Head: Dia. 7/16"; Ht. 7/32"
Thread: 1/4"-20, 7/16" Lg.
Hex Key Size: 5/32"

Shoulder Lg.	Pkg. Qty.		Each★
1/4"	10	90298A574	$1.40
3/8"	10	90298A576	1.43
1/2"	10	90298A578	1.46
5/8"	10	90298A580	1.49
3/4"	10	90298A581	1.68
1"	10	90298A583	1.74
1 1/4"	10	90298A585	2.06
1 1/2"	10	90298A587	2.34
1 3/4"	5	90298A589	2.60
2"	5	90298A591	2.87
2 1/4"	5	90298A592	3.50

5/16" Shoulder Dia. (Cont.)

Shoulder Lg.	Pkg. Qty.		Each★
2 1/2"	5	90298A593	3.81
2 3/4"	5	90298A594	4.15
3"	5	90298A595	4.78
3 1/2"	5	90298A597	5.29
4"	5	90298A599	6.43

3/8" Shoulder Dia.
Head: Dia. 9/16"; Ht. 1/4"
Thread: 5/16"-18, 1/2" Lg.
Hex Key Size: 3/16"

Shoulder Lg.	Pkg. Qty.		Each★
1/4"	5	90298A615	$1.90
3/8"	5	90298A617	1.92
1/2"	5	90298A619	2.01
5/8"	5	90298A621	2.11
3/4"	5	90298A622	2.14
1"	5	90298A624	2.37
1 1/4"	5	90298A626	2.63
1 1/2"	5	90298A628	2.67
1 3/4"	5	90298A630	2.93
2"	5	90298A632	3.08
2 1/4"	5	90298A633	3.09
2 1/2"	5	90298A634	3.43
2 3/4"	5	90298A635	3.66
3"	5	90298A636	4.00
3 1/2"	5	90298A638	4.43
4"	5	90298A640	7.33

1/2" Shoulder Dia.
Head: Dia. 3/4"; Ht. 5/16"
Thread: 3/8"-16, 5/8" Lg.
Hex Key Size: 1/4"

Shoulder Lg.	Pkg. Qty.		Each★
3/8"	5	90298A705	$3.18
1/2"	5	90298A707	3.33
5/8"	5	90298A709	3.39
3/4"	5	90298A710	3.40

1/2" Shoulder Dia. (Cont.)

Shoulder Lg.	Pkg. Qty.		Each★
1"	5	90298A712	3.46
1 1/4"	5	90298A714	3.76
1 1/2"	5	90298A716	4.06
1 3/4"	5	90298A718	4.26
2"	5	90298A720	4.90
2 1/4"	5	90298A721	5.59
2 1/2"	5	90298A722	6.29
2 3/4"	5	90298A723	8.03
3"	5	90298A724	9.17
3 1/2"	5	90298A726	9.69
4"	5	90298A728	10.72
4 1/2"	5	90298A730	13.36
5"	5	90298A732	15.51
6"	5	90298A735	17.60

5/8" Shoulder Dia.
Head: Dia. 7/8"; Ht. 3/8"
Thread: 1/2"-13, 3/4" Lg.
Hex Key Size: 5/16"

Shoulder Lg.	Pkg. Qty.		Each★
1/2"	5	90298A790	$9.25
5/8"	5	90298A791	9.70
3/4"	5	90298A792	10.15
1"	5	90298A794	10.45
1 1/4"	5	90298A796	10.77
1 1/2"	5	90298A798	11.06
1 3/4"	5	90298A800	11.52
2"	5	90298A802	12.20
2 1/2"	5	90298A804	13.11
3"	5	90298A806	14.26
3 1/2"	5	90298A808	15.15
4"	5	90298A810	16.47
4 1/2"	5	90298A812	18.68
5"	5	90298A814	20.00
6"	5	90298A817	23.83

3/4" Shoulder Dia.
Head: Dia. 1"; Ht. 1/2"
Thread: 5/8"-11, 7/8" Lg.
Hex Key Size: 3/8"

Shoulder Lg.	Pkg. Qty.		Each★
5/8"	5	90298A834	$12.56
3/4"	5	90298A835	13.25
1"	5	90298A836	13.38
1 1/4"	5	90298A837	13.82
1 1/2"	5	90298A839	14.26
1 3/4"	5	90298A841	14.71
2"	5	90298A843	15.15
2 1/2"	5	90298A845	16.03
3"	5	90298A847	16.91
3 1/2"	5	90298A849	17.79
4"	5	90298A851	19.56
4 1/2"	5	90298A853	21.14
5"	5	90298A855	22.94
6"	5	90298A859	24.71

1" Shoulder Dia.
Head: Dia. 1 5/16"; Ht. 5/8"
Thread: 3/4"-10, 1" Lg.
Hex Key Size: 1/2"

Shoulder Lg.	Pkg. Qty.		Each★
1"	1	90298A870	$29.00
1 1/2"	1	90298A872	30.80
1 3/4"	1	90298A874	32.65
2"	1	90298A875	35.33
2 1/2"	1	90298A877	38.97
3"	1	90298A879	42.60
3 1/2"	1	90298A881	47.13
4"	1	90298A883	48.94
5"	1	90298A885	50.75
6"	1	90298A887	52.56

Alloy Steel

1/4" Shoulder Dia.
Head: Dia. 3/8"; Ht. 3/16"
Thread: 10-24, 3/8" Lg.
Hex Key Size: 7/8"

Shoulder Lg.	Pkg. Qty.		Each★
1/4"	25	91259A533	$0.72
3/8"	25	91259A535	.73
1/2"	25	91259A537	.73
5/8"	25	91259A539	.76
3/4"	25	91259A540	.77

1/4" Shoulder Dia. (Cont.)

Shoulder Lg.	Pkg. Qty.		Each★
1"	25	91259A542	.82
1 1/4"	25	91259A544	.86
1 1/2"	25	91259A546	.92
1 3/4"	25	91259A102▲	4.11
2"	25	91259A103▲	4.30
2 1/4"	25	91259A104▲	4.81
2 1/2"	25	91259A105▲	5.22
3"	25	91259A106▲	5.56

5/16" Shoulder Dia.
Head: Dia. 7/16"; Ht. 7/32"
Thread: 1/4"-20, 7/16" Lg.
Hex Key Size: 5/32"

Shoulder Lg.	Pkg. Qty.		Each★
1/4"	25	91259A574	$0.85
3/8"	25	91259A576	.86
1/2"	25	91259A578	.85
5/8"	25	91259A580	.89
3/4"	25	91259A581	.90

5/16" Shoulder Dia. (Cont.)

Shoulder Lg.	Pkg. Qty.		Each★
1"	25	91259A583	.93
1 1/4"	25	91259A585	1.02
1 1/2"	25	91259A587	1.01
1 3/4"	25	91259A589	1.15
2"	25	91259A591	1.18
2 1/4"	25	91259A108▲	4.40
2 1/2"	25	91259A109▲	4.62
3"	25	91259A111▲	5.13

▲ Nonstandard size.

(Continued on following page)

★ ***Prices are 15% lower when you buy in full-package quantities.***

For shoulder screw shims, see pages 3009-3010.

Standard Shoulder *(Continued from previous page)*

Alloy Steel (Cont.)

3/8" Shoulder Dia.
Head: Dia. 9/16"; Ht. 1/4"
Thread: 5/16"-18, 1/2" Lg.
Hex Key Size: 3/16"

Shoulder Lg.	Pkg. Qty.		Each★
1/4"	25	91259A615	$0.94
3/8"	25	91259A617	1.02
1/2"	25	91259A619	1.05
5/8"	25	91259A621	1.05
3/4"	25	91259A622	1.07
1"	25	91259A624	1.08
1 1/4"	25	91259A626	1.14
1 1/2"	25	91259A628	1.18
1 3/4"	25	91259A630	1.21
2"	25	91259A632	1.30
2 1/4"	25	91259A633	1.34
2 1/2"	25	91259A634	1.48
2 3/4"	25	91259A635	1.56
3"	25	91259A636	1.70
3 1/4"	25	91259A637	1.94
3 1/2"	25	91259A638	2.10
3 3/4"	25	91259A639	2.40
4"	25	91259A640	2.42
4 1/2"	25	91259A112▲	12.16
5"	25	91259A113▲	12.30
6"	25	91259A114▲	12.78

1/2" Shoulder Dia.
Head: Dia. 3/4"; Ht. 5/16"
Thread: 3/8"-16, 5/8" Lg.
Hex Key Size: 1/4"

Shoulder Lg.	Pkg. Qty.		Each★
3/8"	25	91259A705	$1.56
1/2"	25	91259A707	1.62

1/2" Shoulder Dia. (Cont.)

Shoulder Lg.	Pkg. Qty.		Each★
5/8"	25	91259A709	$1.69
3/4"	25	91259A710	1.67
1"	25	91259A712	1.71
1 1/4"	25	91259A714	1.75
1 1/2"	25	91259A716	1.79
1 3/4"	25	91259A718	1.89
2"	25	91259A720	1.90
2 1/4"	25	91259A721	2.08
2 1/2"	25	91259A722	2.15
2 3/4"	25	91259A723	2.28
3"	25	91259A724	2.41
3 1/4"	25	91259A725	2.68
3 1/2"	25	91259A726	2.86
3 3/4"	25	91259A727	3.35
4"	25	91259A728	3.34
4 1/4"	25	91259A729	4.06
4 1/2"	10	91259A730	4.06
4 3/4"	10	91259A731	4.53
5"	10	91259A732	3.41
5 1/2"	10	91259A116▲	14.53
6"	10	91259A117▲	15.97

5/8" Shoulder Dia.
Head: Dia. 7/8"; Ht. 3/8"
Thread: 1/2"-13, 3/4" Lg.
Hex Key Size: 5/16"

Shoulder Lg.	Pkg. Qty.		Each★
1/2"	25	91259A118▲	$5.30
5/8"	25	91259A119▲	3.23
3/4"	25	91259A792	2.74
1"	25	91259A794	2.82

5/8" Shoulder Dia. (Cont.)

Shoulder Lg.	Pkg. Qty.		Each★
1 1/4"	25	91259A796	$2.73
1 1/2"	25	91259A798	2.89
1 3/4"	25	91259A800	2.97
2"	25	91259A802	3.07
2 1/4"	25	91259A803	3.51
2 1/2"	25	91259A804	3.64
2 3/4"	25	91259A805	3.94
3"	25	91259A806	4.18
3 1/4"	25	91259A807	4.87
3 1/2"	25	91259A808	5.46
3 3/4"	10	91259A809	6.41
4"	10	91259A810	6.70
4 1/4"	10	91259A811	7.53
4 1/2"	10	91259A812	7.61
4 3/4"	10	91259A813	8.28
5"	10	91259A814	8.38
5 1/2"	10	91259A816	10.34
6"	10	91259A818	13.39

3/4" Shoulder Dia.
Head: Dia. 1"; Ht. 1/2"
Thread: 5/8"-11, 7/8" Lg.
Hex Key Size: 3/8"

Shoulder Lg.	Pkg. Qty.		Each★
1/2"	10	91259A122▲	$8.23
3/4"	10	91259A123▲	5.22
1"	10	91259A124▲	5.22
1 1/4"	10	91259A125▲	5.93
1 1/2"	10	91259A839	4.99
1 3/4"	10	91259A841	5.07
2"	10	91259A843	5.20

3/4" Shoulder Dia. (Cont.)

Shoulder Lg.	Pkg. Qty.		Each★
2 1/4"	10	91259A844	$5.37
2 1/2"	10	91259A845	5.82
2 3/4"	10	91259A846	7.24
3"	10	91259A847	7.37
3 1/4"	10	91259A848	7.50
3 1/2"	10	91259A849	7.51
3 3/4"	10	91259A850	8.12
4"	10	91259A851	8.28
4 1/4"	10	91259A852	9.18
4 1/2"	10	91259A853	9.27
4 3/4"	10	91259A854	10.25
5"	10	91259A855	10.23
5 1/2"	10	91259A857	12.55
6"	10	91259A860	15.33

1" Shoulder Dia.
Head: Dia. 1 5/16"; Ht. 5/8"
Thread: 3/4"-10, 1" Lg.
Hex Key Size: 1/2"

Shoulder Lg.	Pkg. Qty.		Each★
1"	10	91259A130▲	$13.35
1 1/2"	10	91259A132▲	13.76
1 3/4"	10	91259A133▲	13.76
2"	10	91259A134▲	13.76
2 1/2"	10	91259A136▲	14.42
3"	10	91259A138▲	15.07
3 1/2"	10	91259A140▲	26.98
4"	10	91259A141▲	31.20
5"	10	91259A142▲	33.59
6"	10	91259A145▲	35.20

▲ Nonstandard size.

Metric Standard Shoulder

The metric version of our heat-treated alloy steel screw (91259A) shown on page 2882 and above. Made of class 12.9 alloy steel which provides increased wear resistance on the shoulder. Shoulder tolerances: diameter, -0.01 mm to -0.072 mm; length, +0 mm to +0.25 mm. Head chamfer is 30° to 45°. Tip chamfer is approximately 45°. These knurled socket head screws meet ISO 7379 dimensions (except where noted). Head and threads have black finish. Minimum tensile strength is 176,900 psi. Rockwell hardness: C32-43.

Package quantity is 10.

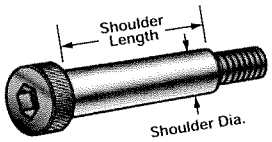

M6 Shoulder Dia. ✓
Head: Dia. 10 mm; Ht. 4.5 mm
Thread: M5, 9.5 mm Lg.
Pitch: 0.8 mm
Hex Key Size: 3 mm

Shoulder Lg.		Each★
8 mm	92981A108	$0.92
10 mm	92981A100	.92
12 mm	92981A101	.92
16 mm	92981A102	.94
20 mm	92981A103	.94
25 mm	92981A104	.96
30 mm	92981A105	1.08
35 mm	92981A120	1.16
40 mm	92981A106	1.18
45 mm	92981A130	2.14
50 mm	92981A107	1.28

M8 Shoulder Dia.
Head: Dia. 13 mm; Ht. 5.5 mm
Thread: M6, 11 mm Lg.
Pitch: 1 mm
Hex Key Size: 4 mm

Shoulder Lg.		Each★
10 mm	92981A200	$0.98
12 mm	92981A201	.98
16 mm	92981A202	.98
20 mm	92981A203	1.02
25 mm	92981A204	1.20
30 mm	92981A205	1.20
35 mm	92981A220	2.92
40 mm	92981A206	1.86

M8 Shoulder Dia. (Cont.)

Shoulder Lg.		Each★
45 mm	92981A250	$3.15
50 mm	92981A207	2.05
55 mm	92981A210	3.47
60 mm	92981A215	4.11

M10 Shoulder Dia.
Head: Dia. 16 mm; Ht. 7 mm
Thread: M8, 13 mm Lg.
Pitch: 1.25
Hex Key Size: 5 mm

Shoulder Lg.		Each★
12 mm	92981A300	$2.70
16 mm	92981A302	1.68
20 mm	92981A303	1.78
25 mm	92981A304	1.95
30 mm	92981A305	2.57
35 mm	92981A325	3.41
40 mm	92981A306	2.66
45 mm	92981A335	3.76
50 mm	92981A307	2.90
55 mm	92981A340	3.68
60 mm	92981A308	2.92
70 mm	92981A309	3.13
80 mm	92981A310	4.47

M12 Shoulder Dia. ✓
Head: Dia. 18 mm; Ht. 8 mm
Thread: M10, 16 mm Lg.
Pitch: 1.5 mm
Hex Key Size: 6 mm

Shoulder Lg.		Each★
12 mm	92981A400	$4.28

M12 Shoulder Dia. (Cont.)

Shoulder Lg.		Each★
16 mm	92981A402	$2.67
20 mm	92981A403	2.76
25 mm	92981A404	2.87
30 mm	92981A405	2.94
35 mm	92981A415	4.41
40 mm	92981A406	2.99
45 mm	92981A420	4.76
50 mm	92981A407	3.35
55 mm	92981A430	5.41
60 mm	92981A408	3.72
70 mm	92981A409	4.65
80 mm	92981A410	5.63
90 mm	92981A411	6.39
100 mm	92981A412	7.32

M16 Shoulder Dia.
Head: Dia. 24 mm; Ht. 10 mm
Thread: M12, 18 mm Lg.
Pitch: 1.75 mm
Hex Key Size: 8 mm

Shoulder Lg.		Each★
25 mm	92981A500	$8.13
30 mm	92981A505	4.66
35 mm	92981A520	7.58
40 mm	92981A506	5.11
45 mm	92981A535	7.38
50 mm	92981A507	5.52
55 mm	92981A545	9.77
60 mm	92981A508	7.69
70 mm	92981A509	8.85

M16 Shoulder Dia. (Cont.)

Shoulder Lg.		Each★
80 mm	92981A510	$8.92
90 mm	92981A511	9.16
120 mm	92981A513	13.90

M20 Shoulder Dia.
Head: Dia. 30 mm; Ht. 14 mm
Thread: M16, 22 mm Lg.
Pitch: 2 mm
Hex Key Size: 10 mm

Shoulder Lg.		Each★
35 mm	92981A600	$16.05
40 mm	92981A606	9.28
45 mm	92981A625	16.48
50 mm	92981A607	10.02
55 mm	92981A635	17.50
60 mm	92981A608	11.79
70 mm	92981A609	13.33
80 mm	92981A610	13.47
100 mm	92981A612	21.11
120 mm	92981A613	23.87

M24 Shoulder Dia. ✓
Head: Dia. 36 mm; Ht. 16 mm
Thread: M20, 27 mm Lg.
Pitch: 2.5 mm
Hex Key Size: 12 mm

Shoulder Lg.		Each★
50 mm	92981A705	$36.38
80 mm	92981A720	43.09
90 mm	92981A725	43.51
100 mm	92981A730	45.89
120 mm	92981A735	63.38

✓ Only the shoulder dimensions, tolerances, and finish meet ISO 7379.

Standard Shoulder Assortments

You get a total of 60 shoulder screws in 12 of the most popular sizes. Assortments are furnished in a compartmented, 11" Lg. × 6 3/4" Wd. × 1 3/4" Dp. plastic box.

Each assortment includes five each of the following sizes (diameter and length listed are for shoulder): 1/4" Dia. × 1/2", 3/4", and 1" Lg.; 5/16" Dia. × 1/2", 3/4", and 1" Lg.; 3/8" Dia. × 1/2", 3/4", and 1" Lg.; and 1/2" Dia. × 1/2", 3/4", and 1" Lg. Screws have the same specifications as the corresponding sizes shown on page 2882 and above on this page.

		Each
18-8 Stainless Steel Assortment	93305A101	$190.03
Alloy Steel Assortment	97315A201	99.39

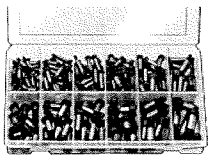

★ Prices are 15% lower when you buy in full-package quantities.

23

Slotted Nuts & Flange Nuts

For information about nut materials, see page 2961.

Slotted Nuts

Slotted

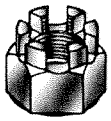

Castle Style

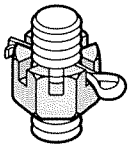

Slotted Nut with Fastener and Cotter Pin

For fastening and locking, just insert a cotter pin or safety wire through the slots and through a drilled hole in your fastener. Slots are milled. Nuts have a hex shape. ***Castle style*** nuts have a cylindrical crown. For cotter pins, see pages 3068-3071. For safety wire, see 6504K and 89065K on page 3398.

Screw Size	Width	Cotter Pin, Dia.	Slot Width	Slot Depth	SLOTTED Grade 2 Zinc-Plated Steel Ht.	Pkg. Qty.		Per Pkg.	CASTLE STYLE 18-8 Stainless Steel Ht.	Pkg. Qty.		Per Pkg.
10-32	3/8"	0.032"•	0.07"	0.09"	—	—	—	—	1/4"	5	91853A510	$5.35
1/4"-20	7/16"	0.032"•	0.07"	0.09"	7/32"	50	95030A110	$7.00	9/32"	5	91853A029	5.50
1/4"-28	7/16"	0.032"•	0.07"	0.09"	7/32"	50	95030A120	7.00	9/32"	5	91853A515	6.30
5/16"-18	1/2"	0.040"•	0.09"	0.09"	17/64"	25	95030A130	4.00	21/64"	5	91853A030	7.00
5/16"-24	1/2"	0.040"•	0.09"	0.09"	17/64"	25	95030A140	4.25	21/64"	5	91853A520	9.20
3/8"-16	9/16"	1/16"	0.12"	0.13"	21/64"	25	95030A150	4.50	13/32"	5	91853A031	9.35
3/8"-24	9/16"	1/16"	0.12"	0.13"	21/64"	25	95030A160	4.50	13/32"	1	91853A525	2.08
7/16"-14	11/16"	1/16"	0.12"	0.15"	3/8"	50	95030A170	7.50	—	—	—	—
7/16"-20	11/16"	1/16"	0.12"	0.15"	3/8"	25	95030A180	4.25	—	—	—	—
1/2"-13	3/4"	3/32"	0.15"	0.15"	7/16"	25	95030A190	4.75	9/16"	1	91853A033	2.12
1/2"-20	3/4"	3/32"	0.15"	0.15"	7/16"	25	95030A210	5.00	9/16"	1	91853A535	2.33
9/16"-12	7/8"	3/32"	0.15"	0.18"	31/64"	25	95030A220	8.25	—	—	—	—
9/16"-18	7/8"	3/32"	0.15"	0.18"	31/64"	25	95030A230	8.50	—	—	—	—
5/8"-11	15/16"	3/32"	0.18"	0.21"	35/64"	25	95030A240	9.50	23/32"	1	91853A035	4.10
5/8"-18	15/16"	3/32"	0.18"	0.21"	35/64"	10	95030A250	4.00	23/32"	1	91853A545	4.88
3/4"-10	1 1/8"	3/32"	0.18"	0.23"	41/64"	10	95030A260	5.60	13/16"	1	91853A036	5.91
3/4"-16	1 1/8"	3/32"	0.18"	0.23"	41/64"	10	95030A270	6.10	13/16"	1	91853A550	6.65
7/8"-9	1 5/16"	3/32"	0.18"	0.23"	3/4"	5	95030A280	4.45	29/32"	1	91853A037	9.75
7/8"-14	1 5/16"	3/32"	0.18"	0.23"	3/4"	5	95030A290	4.55	—	—	—	—
1"-8	1 1/2"	5/32"	0.24"	0.27"	55/64"	5	95030A310	7.20	1"	1	91853A038	10.08
1"-14	1 1/2"	5/32"	0.24"	0.27"	55/64"	5	95030A320	7.40	—	—	—	—
1 1/4"-7	1 7/8"	3/16"	0.31"	0.36"	1 1/16"	1	95030A350	2.58	1 1/4"	1	91853A040	30.34
1 1/4"-12	1 7/8"	3/16"	0.31"	0.36"	1 1/16"	1	95030A360	2.94	—	—	—	—
1 1/2"-6	2 1/4"	1/4"	0.37"	0.42"	1 9/32"	1	95030A370	4.54	1 1/2"	1	91853A041	43.14
1 1/2"-12	2 1/4"	1/4"	0.37"	0.42"	1 9/32"	1	95030A380	5.30	—	—	—	—
1 3/4"-5	2 5/8"	1/4"	0.43"	0.47"	1 1/2"	1	95030A390	8.85	—	—	—	—
1 3/4"-12	2 5/8"	1/4"	0.43"	0.47"	1 1/2"	1	95030A410	9.12	—	—	—	—
2"-4 1/2	3"	5/16"	0.43"	0.54"	1 23/32"	1	95030A420	16.14	—	—	—	—
2"-12	3"	5/16"	0.43"	0.54"	1 23/32"	1	95030A430	16.62	—	—	—	—

• Tie wire.

Screw Size	Pitch, mm	Wd., mm	Ht., mm	Slot, mm Wd.	Slot, mm Dp.	Pkg. Qty.	Slotted	Per Pkg.
Metric Class 6 DIN 935—Zinc-Plated Steel								
M4	0.7	7	5	1.2	1.8	5	93760A180	$9.35
M5	0.8	8	6	1.4	2	5	93760A190	6.40
M6	1	10	7.5	2	2.5	5	93760A212	2.60
Metric Class 8 DIN 935—Zinc-Plated Steel								
M8	1.25	13	9.5	2.5	3	5	93760A222	2.85
M10	1.5	17	12	2.8	4	5	93760A233	5.40

Screw Size	Pitch, mm	Wd., mm	Ht., mm	Slot, mm Wd.	Slot, mm Dp.	Pkg. Qty.	Castle Style	Per Pkg.
Metric Class 8 DIN 935—Zinc-Plated Steel								
M12	1.75	19	15	3.5	5	5	93760A317	$6.60
M16	2	24	19	4.5	6	5	93760A328	7.85
M20	2.5	30	22	4.5	6	5	93760A337	10.00
M24	3	36	27	5.5	8	1	93760A340	4.10

Flange Nuts

Flange Nut

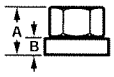

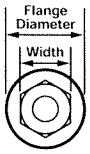

Spherical Flange Nut

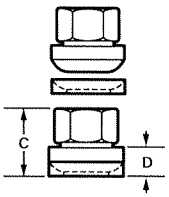

Choose 18-8 stainless steel or 12L14 case hardened steel.

Flange Nuts—Also known as collar nuts. Made from one solid piece of steel, these nuts are used where extra bearing surface is needed. The flange has a flat bottom and eliminates the need for an extra washer. It also can cover oversize holes.

Spherical Flange Nuts with Washers—Also known as spherical collar nuts. Have a convex bottom that fits the concave surface of the washer, enabling secure clamping even with slightly offset setups.

Screw Size	Flange Wd.	Flange Dia.	O'all Ht., (A)	Flange Ht., (B)	FLANGE NUTS 18-8 Stainless Steel	Each	Hardened Black-Oxide Steel	Each	SPHERICAL FLANGE NUTS Hardened Black-Oxide Steel Assembled Height, (C)	Ht., (D)		Each
1/4"-20	1/2"	5/8"	5/16"	3/32"	94758A028	$4.34	91030A028	$1.29	7/16"	7/32"	91045A029	$2.92
1/4"-28	1/2"	5/8"	5/16"	3/32"	94758A615	4.30	91030A420	1.45	—	—	—	—
5/16"-18	9/16"	3/4"	3/8"	3/32"	94758A029	4.34	91030A029	1.40	17/32"	9/32"	91045A030	3.18
5/16"-24	9/16"	3/4"	3/8"	3/32"	94758A625	4.76	91030A425	1.53	—	—	—	—
3/8"-16	11/16"	7/8"	1/2"	1/8"	94758A031	5.06	91030A031	1.51	21/32"	9/32"	91045A031	3.30
3/8"-24	11/16"	7/8"	1/2"	1/8"	94758A635	5.06	91030A430	1.56	—	—	—	—
7/16"-14	3/4"	1"	9/16"	5/32"	94758A032	5.90	91030A032	1.75	3/4"	11/32"	91045A032	3.82
7/16"-20	3/4"	1"	9/16"	5/32"	94758A645	5.90	91030A435	1.78	—	—	—	—
1/2"-13	7/8"	1 1/8"	11/16"	5/32"	94758A033	6.40	91030A033	1.75	7/8"	3/8"	91045A033	3.82
1/2"-20	7/8"	1 1/8"	11/16"	5/32"	94758A655	6.40	91030A440	1.73	—	—	—	—
5/8"-11	1 1/16"	1 3/8"	13/16"	3/16"	94758A035	7.72	91030A035	2.20	1 1/32"	13/32"	91045A035	4.62
5/8"-18	1 1/16"	1 3/8"	13/16"	3/16"	94758A665	7.72	91030A445	2.35	—	—	—	—
3/4"-10	1 1/4"	1 5/8"	1"	1/4"	94758A036	10.90	91030A036	3.29	1 23/64"	33/64"	91045A036	6.36
3/4"-16	1 1/4"	1 5/8"	1"	1/4"	94758A675	10.90	91030A450	3.29	—	—	—	—
7/8"-9	1 7/16"	1 3/4"	1 1/8"	1/4"	94758A037	14.04	91030A037	4.55	1 23/64"	31/64"	91045A037	8.38
7/8"-14	1 7/16"	1 3/4"	1 1/8"	1/4"	—	—	91030A455	4.82	—	—	—	—
1"-8	1 5/8"	2"	1 1/4"	1/4"	94758A038	17.90	91030A038	5.45	1 35/64"	17/32"	91045A038	9.76
1"-14	1 5/8"	2"	1 1/4"	1/4"	94758A695	17.90	91030A460	5.45	—	—	—	—
1 1/4"-7	1 13/16"	2 1/2"	1 1/4"	1/4"	—	—	91030A040	11.24	1 5/8"	5/8"	91045A040	20.80

METRIC HARDENED BLACK-OXIDE STEEL FLANGE NUTS

Screw Size	Pitch, mm	Flange Wd., mm	Flange Dia., mm	O'all Ht. (A), mm	Ht. (B), mm		Each
M6	1	10	16	8	2	91005A033	$2.12
M8	1.25	13	19	10	2.5	91005A035	2.20
M10	1.5	17	22	13	3	91005A037	2.82
M12	1.75	19	27	17	4	91005A038	3.10
M16	2	24	33	21	5	91005A039	$3.56
M20	2.5	30	40	25	6	91005A041	4.86
M24	3	36	49	32	7	91005A045	6.28

24

Cotter Pin Assortments

Large Assortments—1200 Pieces, 10 Sizes

Assortments include the following sizes: 200 each 1/16" Dia. × 1/2" Lg.; 150 each 1/16" Dia. × 1" Lg.; 250 each 3/32" Dia. × 3/4" Lg.; 200 each 3/32" Dia. × 1" Lg.; 125 each 3/32" Dia. × 1 1/2" Lg.; 100 each 1/8" Dia. × 1" Lg.; 75 each 1/8" Dia. × 1 1/2" Lg.; 65 each 1/8" Dia. × 2" Lg.; 20 each 5/32" Dia. × 2" Lg.; 15 each 3/16" Dia. × 2" Lg. Furnished in an 11" Lg. × 6 1/2" Wd. × 1 3/4" Ht. clear plastic compartmented box.

		Each
18-8 Stainless Steel	90160A214	$89.15
Zinc-Plated Steel	98600A135	24.58

Medium Assortments—550 Pieces, 7 sizes

Assortments include the following sizes: 125 each 1/16" Dia. × 1" Lg., 3/32" Dia. × 1" Lg.; 80 each 3/32" Dia. × 3/4" Lg.; 70 each 3/32" Dia. × 1 1/2" Lg; 60 each 1/8" Dia. × 1" Lg.; 50 each 1/8" Dia. × 1 1/2" Lg.; 40 each 1/8" Dia. × 2" Lg. Furnished in an 8 1/4" Lg. × 4 1/4" Wd. × 1 3/8" Ht. clear plastic compartmented box.

		Each
18-8 Stainless Steel	90160A212	$50.55
Zinc-Plated Steel	98600A290	14.75

Small Assortments—100 Pieces, 14 Sizes

Assortments include the following sizes: 10 each 3/32" Dia. × 3/4" Lg., 3/32" Dia. × 1" Lg., 1/8" Dia. × 1" Lg., 1/8" Dia. × 1 1/4" Lg., 3/16" Dia. × 1" Lg., 3/16" Dia. × 1 1/2" Lg.; 8 each 1/8" Dia. × 1 1/2" Lg., 3/16" Dia. × 2" Lg.; 6 each 1/4" Dia. × 1 1/2" Lg., 1/4" Dia. × 2" Lg.; 4 each 3/32" Dia. × 1 1/2" Lg., 5/32" Dia. × 1 1/2" Lg.; 2 each 5/16" Dia. × 2" Lg., 5/16" Dia. × 2 1/2" Lg. Furnished in a 4" Lg. × 2 3/4" Wd. × 1 1/8" Ht. clear plastic box.

		Each
18-8 Stainless Steel	90160A318	$19.00
Zinc-Plated Steel	90158A100	5.83

Metric Assortment—100 Pieces, 13 Sizes

Assortment includes the following sizes: 10 each 2.5 mm Dia. × 20 mm Lg., 2.5 mm Dia. × 25 mm Lg., 3.2 mm Dia. × 25 mm Lg., 3.2 mm Dia. × 32 mm Lg., 5 mm Dia. × 32 mm Lg., 5 mm Dia. × 40 mm Lg.; 8 each 3.2 mm Dia. × 40 mm Lg., 6.3 mm Dia. × 40 mm Lg.; 6 each 2.5 mm Dia. × 40 mm Lg., 4 mm Dia. × 40 mm Lg., 6.3 mm Dia. × 50 mm Lg.; 4 each 8 mm Dia. × 50 mm Lg.; 2 each 8 mm Dia. × 63 mm Lg. Furnished in a 4" Lg. × 2 7/8" Wd. × 1 3/8" Ht. clear plastic compartmented case.

		Each
Zinc-Plated Steel	98350A300	$7.38

Cotter Pin Extractors

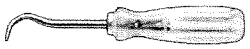

Screwdriver Style

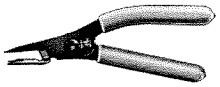

Pliers Style

Pry out cotter pins quickly and easily. ***Screwdriver style*** has a pointed end to remove any size pin. Handle is made of plastic. Overall length is 7 3/4". ***Pliers style*** removes pins up to 1/8" diameter (any length). Has cushion-grip handles. Overall length is 7".

		Each
Screwdriver Style	98436A12	$9.41
Pliers Style	98665A14	13.76

Safety Snap Pins

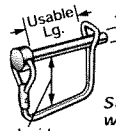

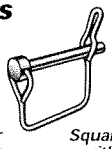

Squared Retainer without Tab Lock

Squared Retainer with Tab Lock

Rounded Retainer without Tab Lock

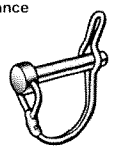

Rounded Retainer with Tab Lock

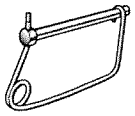

Coil Tension

Snap pins, also known as linch or lock pins, are a single unit that take the place of clevis/cotter pin combinations. ***Retainer*** pins are available in squared and rounded styles. Pins *with tab lock* allow quicker connect and disconnect than pins without tab lock. ***Coil tension*** pins use tension to stay locked.

18-8 stainless steel pins are more corrosion resistant than zinc-plated steel and are slightly magnetic. Tensile strength is 90,000 psi. Rockwell hardness is B85. ***Zinc-plated steel*** pins are made from C1008-C1010 steel. Tensile strength is 60,000 psi. Rockwell hardness is B55.

Pin Dia.	Usable Lg.	O'all Pin Lg.	Inside Clearance	18-8 Stainless Steel	Each	Zinc-Plated Steel	Each
***Squared Retainer—**Without Tab Lock*							
1/4"	2 1/4"	2 13/16"	1 5/8"	98480A012	$4.66	98416A009	$1.58
1/4"	2 1/2"	3 1/16"	1 3/4"	98480A013	4.79	98416A013	1.62
5/16"	2 1/4"	2 13/16"	1 9/16"	98480A017	4.34	98416A017	1.48
5/16"	2 1/2"	3 1/16"	1 11/16"	98480A125	4.45	98416A014	1.51
5/16"	3"	3 9/16"	1 3/4"	—	—	98416A525	1.73
3/8"	2 1/4"	2 13/16"	1 5/8"	98480A019	4.55	98416A018	1.55
3/8"	2 1/2"	3 1/16"	1 5/8"	98480A135	4.66	98416A019	1.58
3/8"	3"	3 9/16"	1 11/16"	—	—	98416A531	1.80
1/2"	3"	3 13/16"	1 7/16"	—	—	98416A562	5.04
***Squared Retainer—**With Tab Lock*							
1/4"	2 1/2"	3 1/32"	1 1/2"	—	—	98416A401	1.52
5/16"	2 1/2"	3 3/64"	1 1/2"	—	—	98416A409	1.62
3/8"	2 1/2"	3 1/16"	1 1/2"	—	—	98416A417	1.76
***Rounded Retainer—**Without Tab Lock*							
1/4"	1 3/8"	1 15/16"	1 5/8"	98480A009	4.34	98416A011	1.48
1/4"	1 3/4"	2 5/16"	1 5/8"	98480A011	4.45	98416A012	1.51
1/4"	2 1/2"	3 1/16"	1 13/16"	—	—	98416A120	1.66
5/16"	1 3/8"	1 15/16"	1 9/16"	98480A014	4.14	98416A015	1.40
5/16"	1 3/4"	2 5/16"	1 9/16"	98480A015	4.24	98416A125	1.44
5/16"	2 1/2"	3 1/16"	1 3/4"	—	—	98416A130	1.55
3/8"	1 3/8"	1 15/16"	1 1/2"	98480A016	4.34	98416A016	1.48
3/8"	1 3/4"	2 5/16"	1 1/2"	98480A018	3.91	98416A135	1.51
3/8"	2 1/2"	3 1/16"	1 3/4"	—	—	98416A140	1.62
***Rounded Retainer—**With Tab Lock*							
1/4"	1 3/4"	2 5/8"	1 5/8"	98480A031	5.24	98416A211	1.62
5/16"	1 3/4"	2 5/8"	1 9/16"	98480A034	5.00	98416A215	1.55
3/8"	1 3/4"	2 5/8"	1 1/2"	98480A037	5.24	98416A219	1.62
Coil Tension							
1/4"	3"	3 11/16"	1 5/8"	—	—	97143A600	3.18
1/4"	3 1/2"	4 3/16"	1 3/4"	—	—	97143A610	3.25
1/4"	4"	4 11/16"	2 1/8"	—	—	97143A615	3.32
5/16"	3"	3 11/16"	1 9/16"	—	—	97143A620	3.25
5/16"	4"	4 11/16"	2 1/8"	—	—	97143A630	3.43
3/8"	3"	3 11/16"	1 9/16"	—	—	97143A635	3.29
3/8"	3 1/2"	4 3/16"	1 3/4"	—	—	97143A640	3.43
3/8"	4"	4 11/16"	3 1/8"	—	—	97143A645	3.57
1/2"	3 1/2"	5 1/8"	2 1/2"	—	—	97143A650	4.88
5/8"	4"	5 3/4"	3 3/16"	—	—	97143A651	5.26
3/4"	4"	5 3/4"	1 15/16"	—	—	97143A652	6.12
3/4"	6"	7 3/4"	2 7/8"	—	—	97143A653	7.44

Safety Pins

Nonslip design is easy to open and close. ***Coil tension*** pins are for securing hitch pins and gates. They can also replace hairpin clips and cotter pins. The tension keeps the pin locked. Available with and without a lanyard. The lanyard is made of 1/16" dia. galvanized aircraft cable and is 6" long on the 1/16" and 3/32" dia. pins; 12" long on the 1/8" and 5/32" dia. pins. ***Standard*** pins are for securing hitch and clevis pins.

18-8 stainless steel pins are more corrosion resistant than zinc-plated steel and are slightly magnetic. Tensile strength is 80,000 psi. Rockwell hardness is B85. ***Zinc-plated steel*** pins are made from C1045-C1050 steel spring wire. Tensile strength is 98,000 psi. Rockwell hardness is B95.

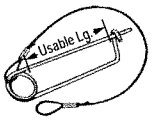

Coil Tension with Lanyard

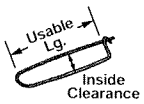

Standard

Wire Dia.	Usable Lg.	O'all Lg.	Inside Clearance	Without Lanyard	Each	With Lanyard	Each
***Coil Tension—**18-8 Stainless Steel*							
1/16"	1 5/8"	2 5/8"	1/2"	90026A103	$1.88	90995A110	$4.85
3/32"	1 5/8"	2 3/4"	1/2"	90026A104	2.19	90995A120	5.15
3/32"	2"	3 1/4"	1/2"	90026A105	2.27	90995A130	5.23
3/32"	2 1/2"	3 3/4"	1/2"	90026A106	2.31	90995A140	5.27
1/8"	2"	3 3/4"	3/4"	90026A107	2.65	90995A150	5.85
1/8"	2 1/2"	4 1/4"	3/4"	90026A108	2.81	90995A160	5.96
1/8"	3"	5"	3/4"	90026A109	2.88	90995A170	4.62
5/32"	2 1/2"	4 1/4"	3/4"	90026A110	3.12	90995A180	6.27
5/32"	3"	5"	3/4"	90026A120	3.27	90995A190	6.42

Wire Dia.	Usable Lg.	O'all Lg.	Inside Clearance	Pkg. Qty.	Without Lanyard	Per Pkg.
***Coil Tension—**Zinc-Plated Steel*						
0.047"	15/16"	1 9/16"	3/8"	25	90174A112	$8.82
0.058"	1 1/16"	1 3/4"	3/8"	25	90174A113	9.79
0.091"	1 11/16"	2 3/4"	5/8"	25	90174A114	10.90
0.120"	2 13/16"	4 3/8"	13/16"	10	90174A115	6.42
0.148"	3 3/4"	5 3/4"	1 1/8"	10	90174A116	9.50
***Standard—**Zinc-Plated Steel*						
3/64"	1 1/4"	1 1/2"	5/16"	100	90319A11	5.05
3/64"	1 1/2"	1 7/8"	5/16"	100	90319A12	5.67
1/16"	2 1/2"	3"	5/8"	100	90319A13	11.89

25

1.4 F.E.A.

1.4.1 Model

The fixture was completely modeled with shells. The diameter and shell thickness of the round bar and shoulder screws were chosen so it would form solid cylinders.

1.4.2 Parameters Used

- Program: EDS I-DEAS v. 9m3 / Simulation.
- Analyses: Linear Statics and Linear Buckling
- Material properties -

  All elements are isotropic steel:

  density = 7.35579×10^{-4} lbf.sec^2/in^4

  η = 0.291

  Elastic modulus = 3.07×10^7 psi
- Elements:

  Shells: parabolic quad shells.

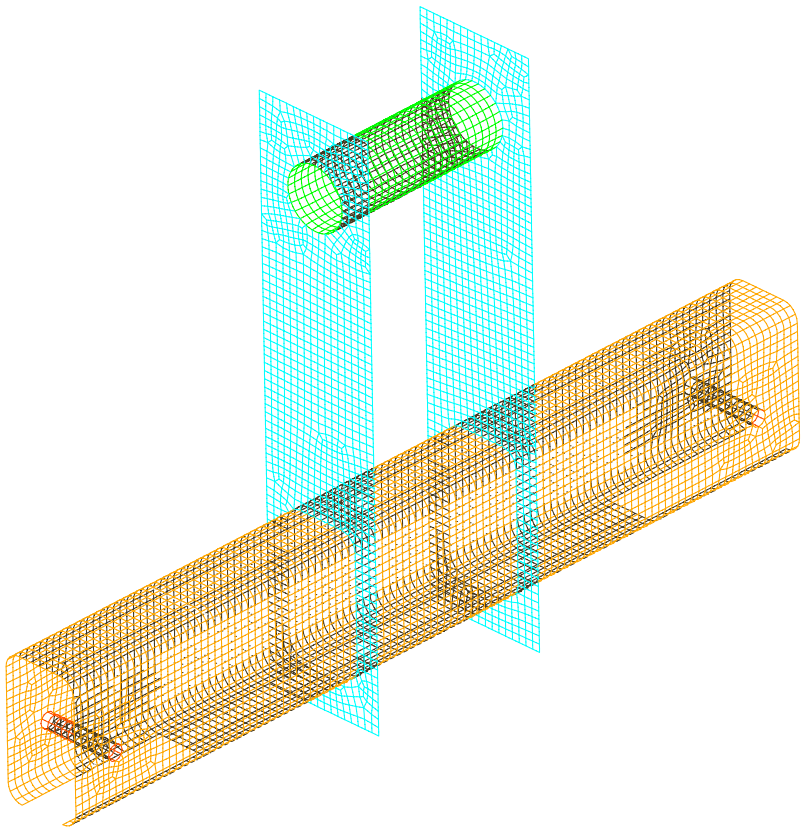

1.4.3 Boundary Conditions

The rated load is 5000 lb. A one-inch wide area at the central part of the round bar was held in X, Y and Z, and 2,500 lb were applied to each one of the shoulder screws. Gravity was also applied.

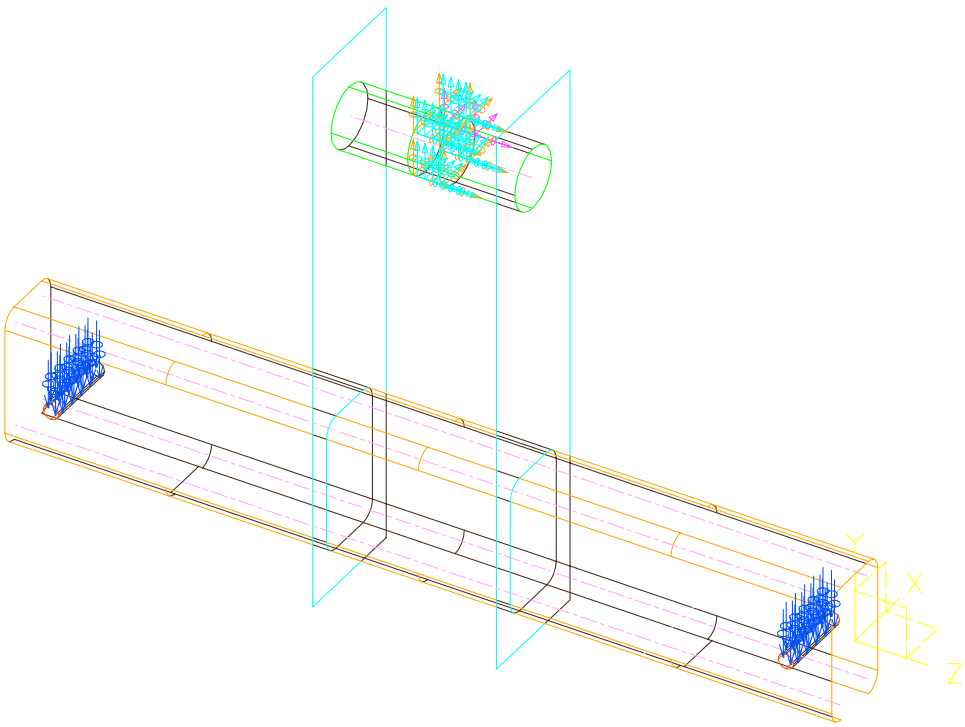

1.4.4 Results

The maximum Von Mises and shear stress (ksi) and overall deflections (in) are indicated in a table after the plots.

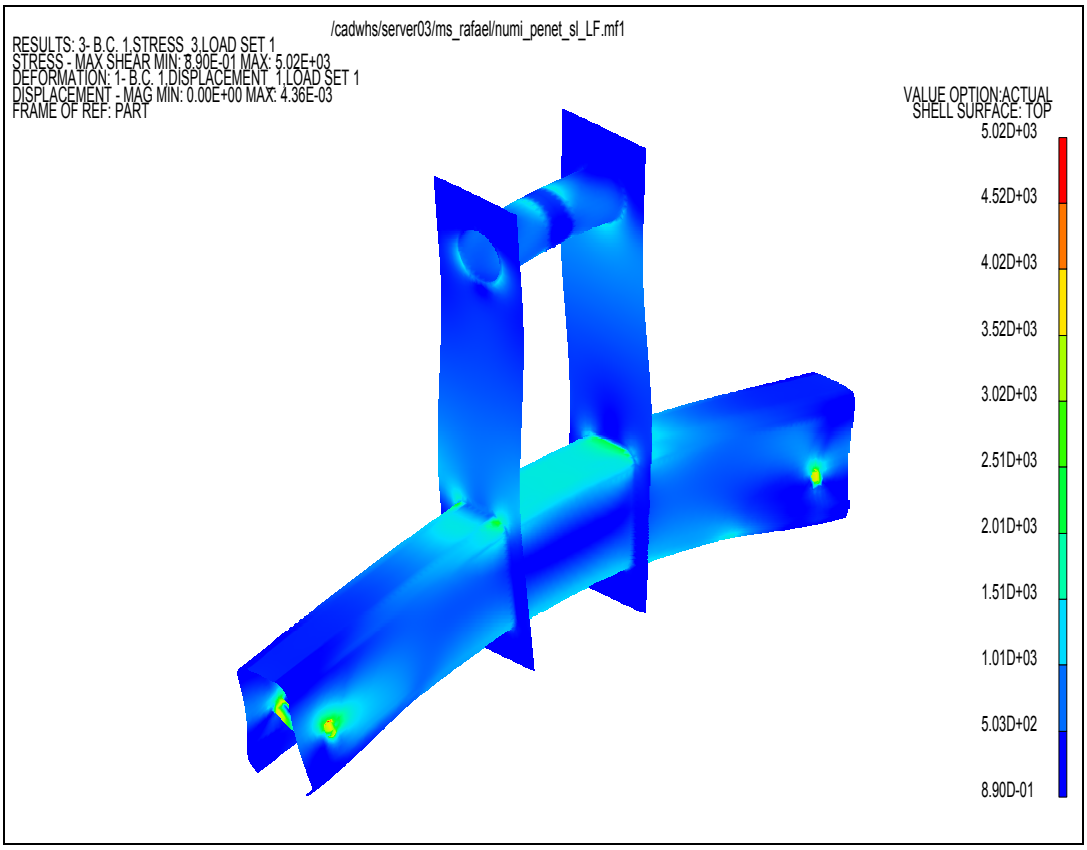
/cadwhs/server03/ms_rafael/numi_penet_sl_LF.mf1
RESULTS: 3- B.C. 1.STRESS 3.LOAD SET 1
STRESS - MAX SHEAR MIN: 8.90E-01 MAX: 5.02E+03
DEFORMATION: 1- B.C. 1.DISPLACEMENT 1.LOAD SET 1
DISPLACEMENT - MAG MIN: 0.00E+00 MAX: 4.36E-03
FRAME OF REF: PART
VALUE OPTION:ACTUAL
SHELL SURFACE: TOP
5.02D+03
4.52D+03
4.02D+03
3.52D+03
3.02D+03
2.51D+03
2.01D+03
1.51D+03
1.01D+03
5.03D+02
8.90D-01

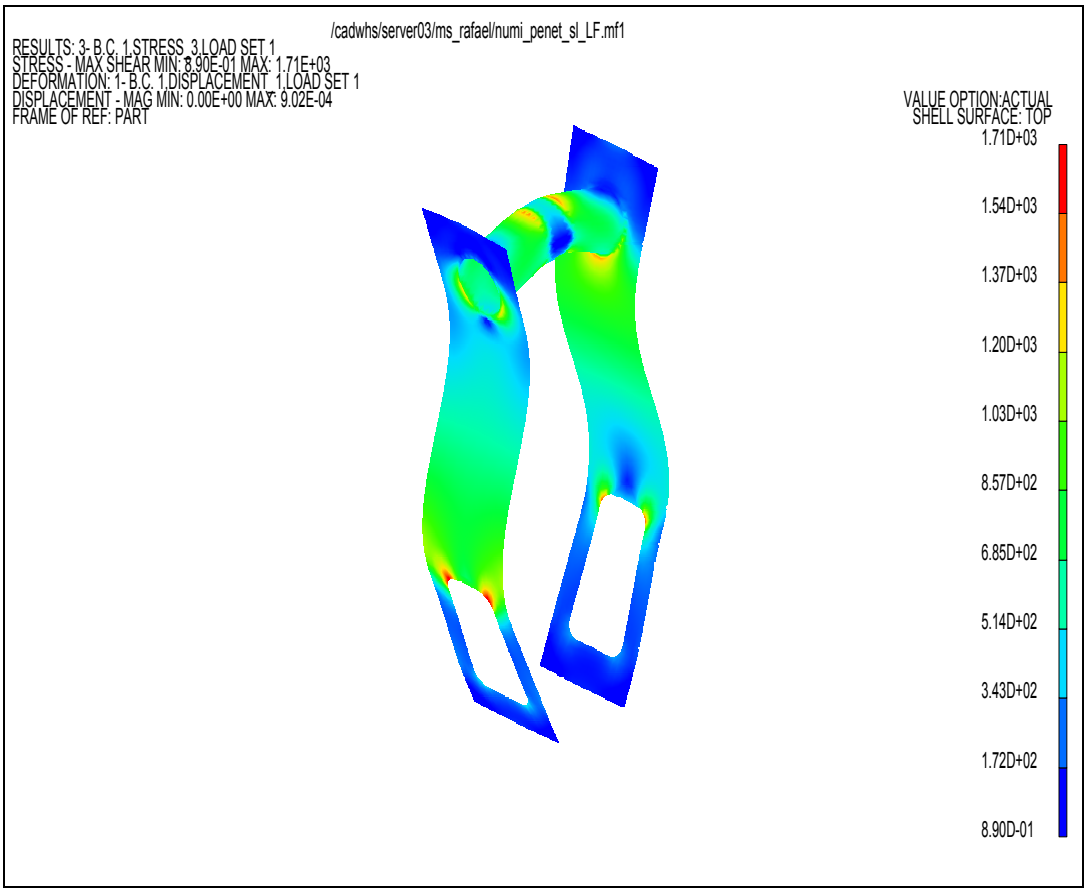
/cadwhs/server03/ms_rafael/numi_penet_sl_LF.mf1
RESULTS: 3- B.C. 1.STRESS 3.LOAD SET 1
STRESS - MAX SHEAR MIN: 8.90E-01 MAX: 1.71E+03
DEFORMATION: 1- B.C. 1.DISPLACEMENT 1.LOAD SET 1
DISPLACEMENT - MAG MIN: 0.00E+00 MAX: 9.02E-04
FRAME OF REF: PART
VALUE OPTION:ACTUAL
SHELL SURFACE: TOP
1.71D+03
1.54D+03
1.37D+03
1.20D+03
1.03D+03
8.57D+02
6.85D+02
5.14D+02
3.43D+02
1.72D+02
8.90D-01

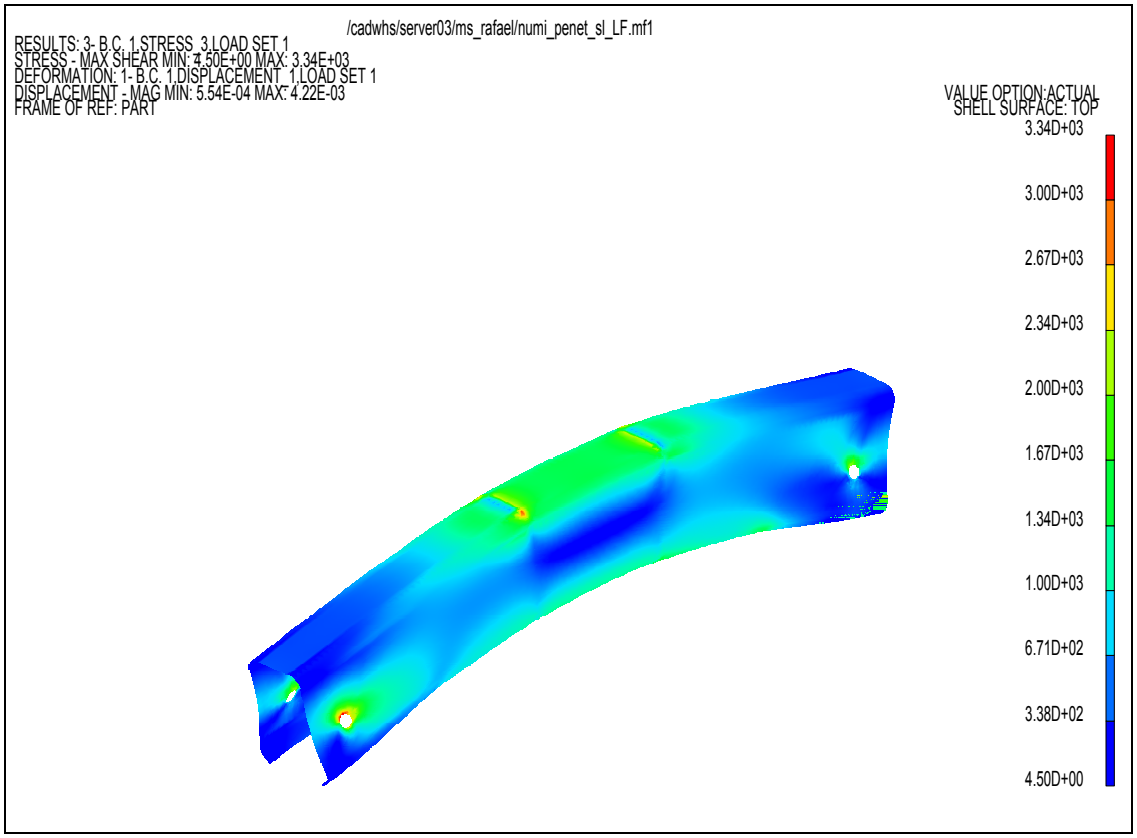
/cadwhs/server03/ms_rafael/numi_penet_sl_LF.mf1
RESULTS: 3- B.C. 1.STRESS_3.LOAD SET 1
STRESS - MAX SHEAR MIN: 4.50E+00 MAX: 3.34E+03
DEFORMATION: 1- B.C. 1.DISPLACEMENT_1.LOAD SET 1
DISPLACEMENT - MAG MIN: 5.54E-04 MAX: 4.22E-03
FRAME OF REF: PART
VALUE OPTION:ACTUAL
SHELL SURFACE: TOP
3.34D+03
3.00D+03
2.67D+03
2.34D+03
2.00D+03
1.67D+03
1.34D+03
1.00D+03
6.71D+02
3.38D+02
4.50D+00

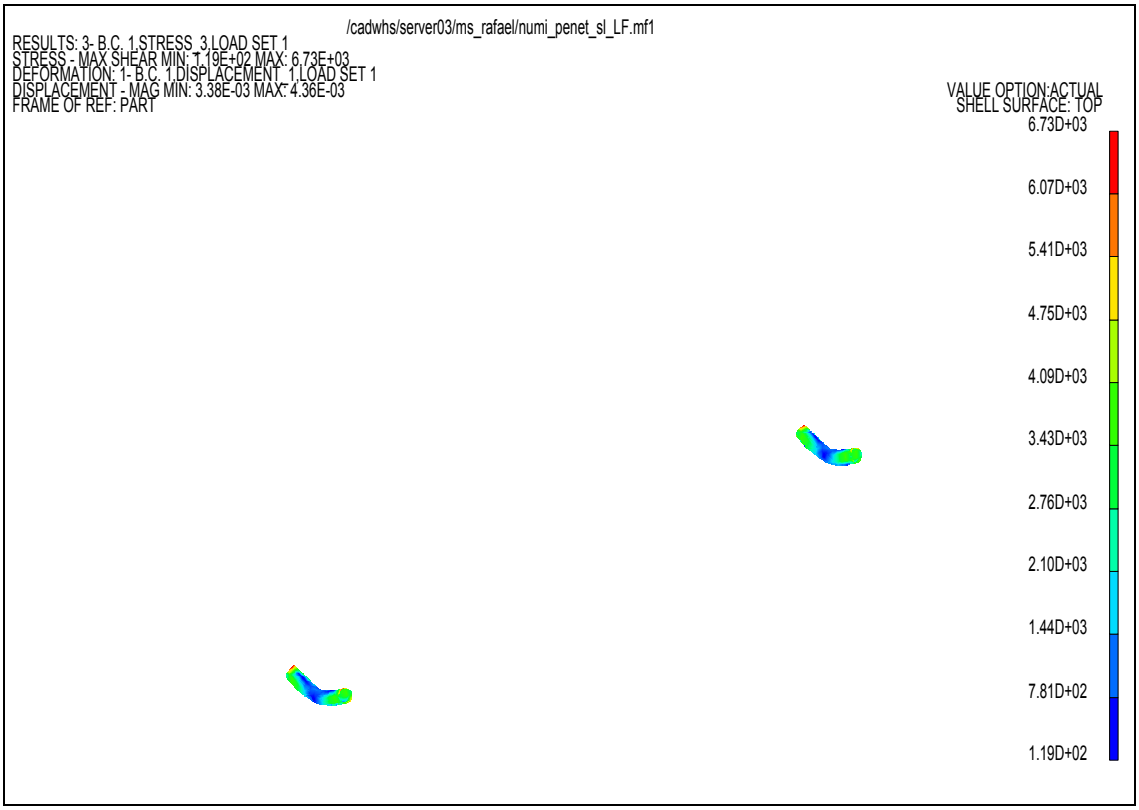
/cadwhs/server03/ms_rafael/numi_penet_sl_LF.mf1
RESULTS: 3- B.C. 1.STRESS_3.LOAD SET 1
STRESS - MAX SHEAR MIN: 1.19E+02 MAX: 6.73E+03
DEFORMATION: 1- B.C. 1.DISPLACEMENT_1.LOAD SET 1
DISPLACEMENT - MAG MIN: 3.38E-03 MAX: 4.36E-03
FRAME OF REF: PART
VALUE OPTION:ACTUAL
SHELL SURFACE: TOP
6.73D+03
6.07D+03
5.41D+03
4.75D+03
4.09D+03
3.43D+03
2.76D+03
2.10D+03
1.44D+03
7.81D+02
1.19D+02

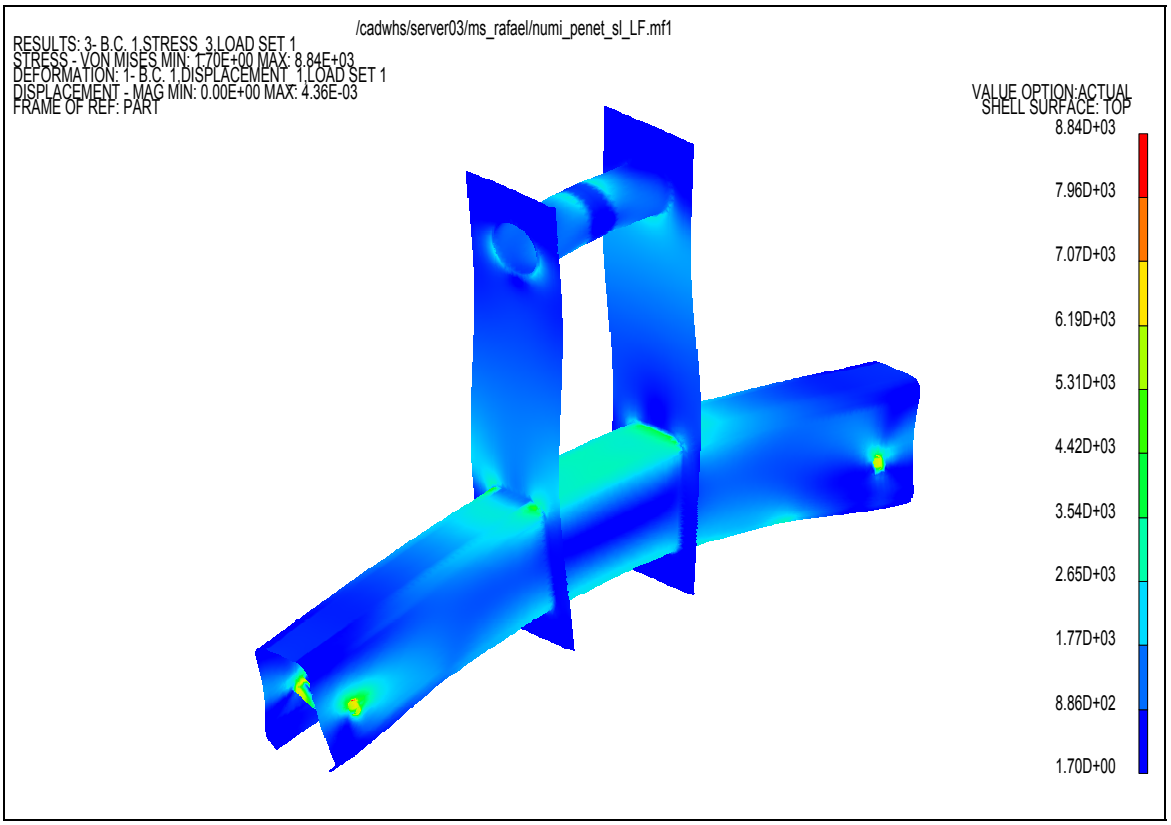
/cadwhs/server03/ms_rafael/numi_penet_sl_LF.mf1
RESULTS: 3- B.C. 1,STRESS_3,LOAD SET 1
STRESS - VON MISES MIN: 1.70E+00 MAX: 8.84E+03
DEFORMATION: 1- B.C. 1,DISPLACEMENT_1,LOAD SET 1
DISPLACEMENT - MAG MIN: 0.00E+00 MAX: 4.36E-03
FRAME OF REF: PART
VALUE OPTION:ACTUAL
SHELL SURFACE: TOP
8.84D+03
7.96D+03
7.07D+03
6.19D+03
5.31D+03
4.42D+03
3.54D+03
2.65D+03
1.77D+03
8.86D+02
1.70D+00

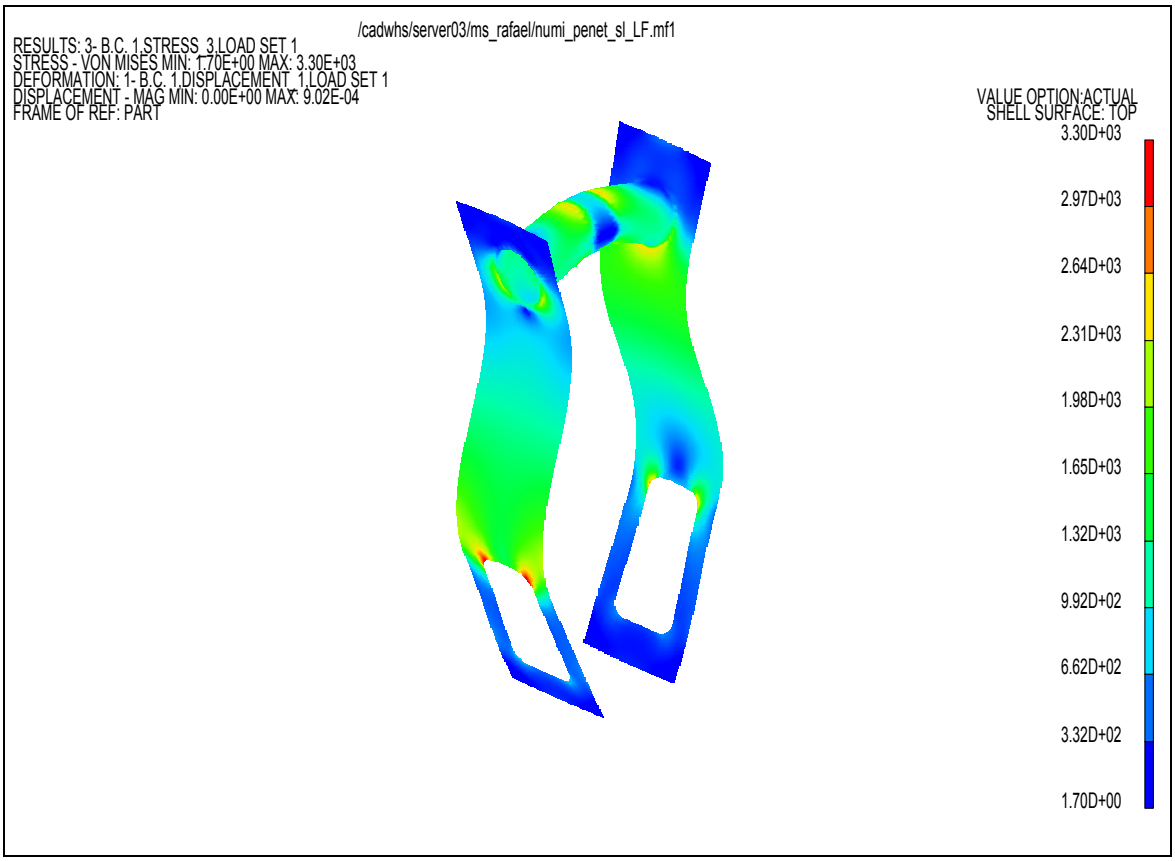
/cadwhs/server03/ms_rafael/numi_penet_sl_LF.mf1
RESULTS: 3- B.C. 1,STRESS_3,LOAD SET 1
STRESS - VON MISES MIN: 1.70E+00 MAX: 3.30E+03
DEFORMATION: 1- B.C. 1,DISPLACEMENT_1,LOAD SET 1
DISPLACEMENT - MAG MIN: 0.00E+00 MAX: 9.02E-04
FRAME OF REF: PART
VALUE OPTION:ACTUAL
SHELL SURFACE: TOP
3.30D+03
2.97D+03
2.64D+03
2.31D+03
1.98D+03
1.65D+03
1.32D+03
9.92D+02
6.62D+02
3.32D+02
1.70D+00

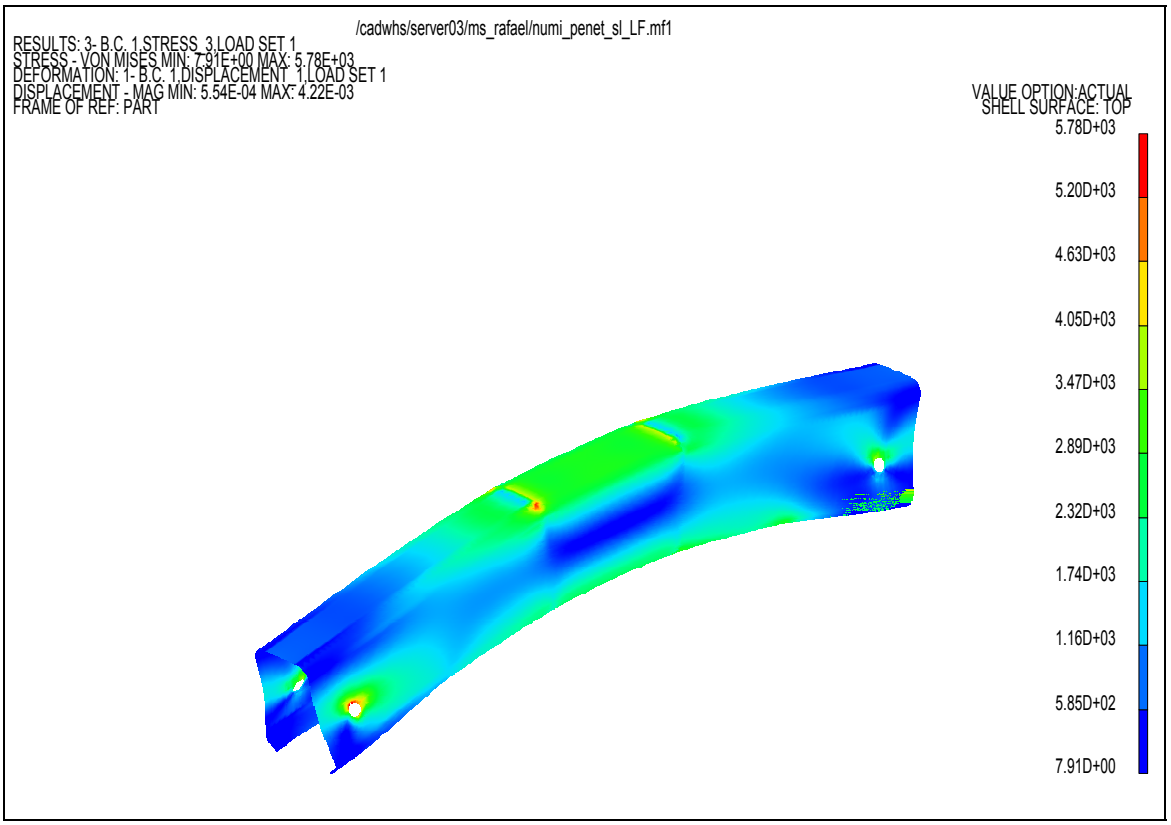
/cadwhs/server03/ms_rafael/numi_penet_sl_LF.mf1
RESULTS: 3- B.C. 1.STRESS_3.LOAD SET 1
STRESS - VON MISES MIN: 7.91E+00 MAX: 5.78E+03
DEFORMATION: 1- B.C. 1.DISPLACEMENT_1.LOAD SET 1
DISPLACEMENT - MAG MIN: 5.54E-04 MAX: 4.22E-03
FRAME OF REF: PART
VALUE OPTION:ACTUAL
SHELL SURFACE: TOP
5.78D+03
5.20D+03
4.63D+03
4.05D+03
3.47D+03
2.89D+03
2.32D+03
1.74D+03
1.16D+03
5.85D+02
7.91D+00

/cadwhs/server03/ms_rafael/numi_penet_sl_LF.mf1
RESULTS: 3- B.C. 1.STRESS_3.LOAD SET 1
STRESS - VON MISES MIN: 2.38E+02 MAX: 1.20E+04
DEFORMATION: 1- B.C. 1.DISPLACEMENT_1.LOAD SET 1
DISPLACEMENT - MAG MIN: 3.38E-03 MAX: 4.36E-03
FRAME OF REF: PART
VALUE OPTION:ACTUAL
SHELL SURFACE: TOP
1.20D+04
1.09D+04
9.68D+03
8.50D+03
7.32D+03
6.14D+03
4.96D+03
3.78D+03
2.60D+03
1.42D+03
2.38D+02

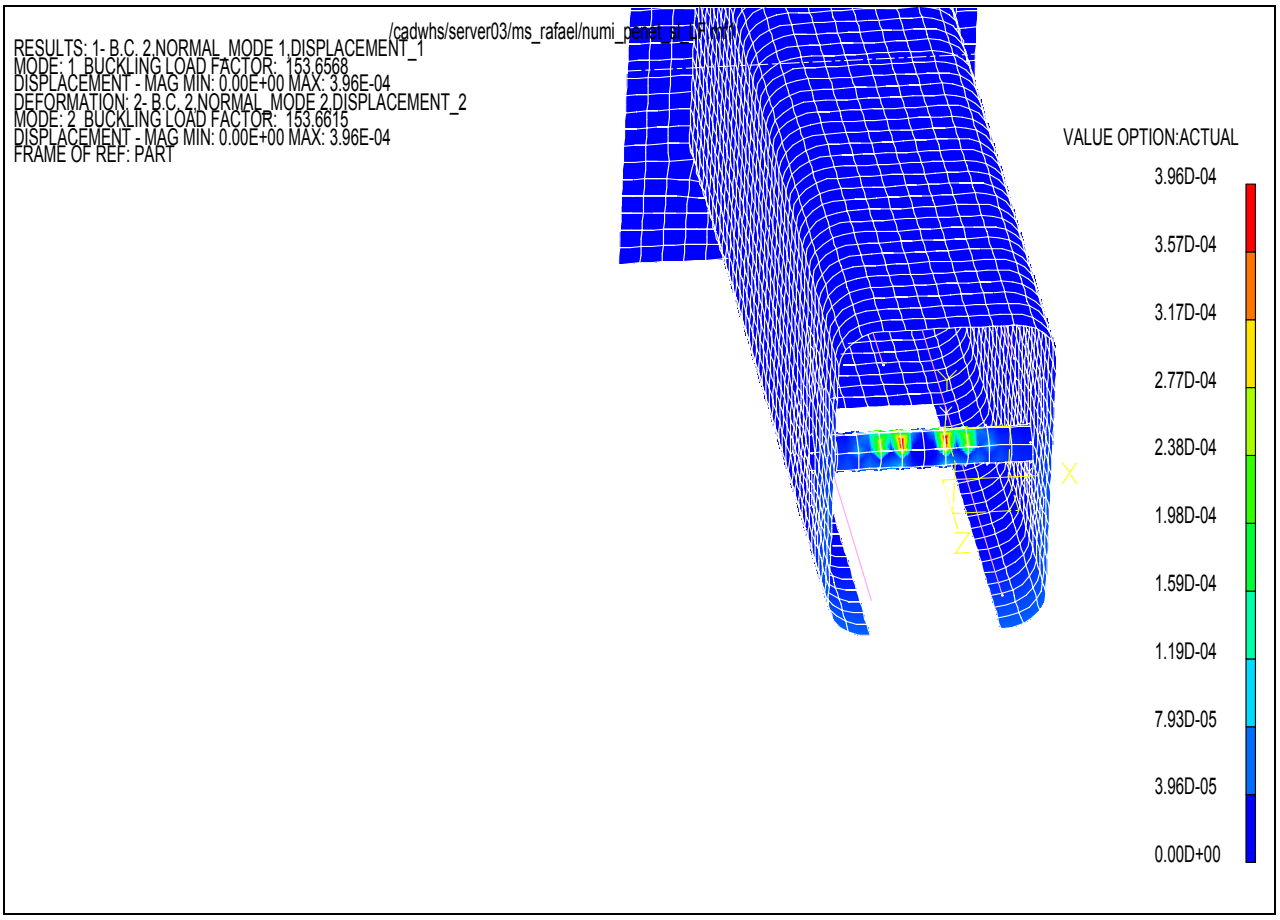

Item	Material	Yield Strength (ksi)	Maximum Von Mises Stress (ksi)	Von Mises Allowable stresses (ksi)	Allowable over Von Mises Ratio	Maximum Shear Stresses (ksi)	Maximum Shear Allowable stresses (ksi)	Maximum Shear over Von Mises Ratio	Maximum Deflection (mils)
Round bar, plates	A 36	36.0	3.3	12.0	3.6	1.7	6.0	3.5	0.9
Tube	A 500	46.0	5.8	15.3	2.6	3.3	7.7	2.3	4.2
Shoulder screws	B 18.3/ A 574	84.0	12.0	28.0	2.3	6.7	14.0	2.1	4.4

The Buckling Load Factor is 153.

Hence, the fixture members are ***OK***.

1.5 Analysis Of Connections

1.5.1 Welded Connections

According to the ANSI/ASME B30.20-1985 "Bellow-the-Hook Lifting Devices" item 20-1.2.2(a), all welding shall be in accordance with ANSI/AWS D1.1. AWS D1.1 determines allowable stresses also in accordance with the AISC code.

The lowest allowable stresses specified are for shear; $.3F_{EXXXX}$ or $.4F_y$. EXXXX minimum is E60XX and Fy minimum is 36 ksi. Hence, the minimum values are:

- $.3F_{EXXXX}$ = 18.0 ksi
- $.4F_y$ = 14.4 ksi

Thus it is conservative to assume:

- $F_{allowable}$ = 14.4 ksi.

It should be noted that, in hand calculations, shear is not combined with normal stresses in bending of *members* because these two kinds of stresses are present in different parts of the members [[1]]. However, in *welds* under off-plane bending, both kinds of stresses may be present in the same region. So, they should be vectorially added.

The method used for calculation of stresses in welds in this note is the elastic vector analysis.

The stresses are less than 1/3 of the allowable stress of 14.4 ksi.

All welds were sized to be equal or larger than the minimum size from AWS D1.1, considering the parts to be joined. See drawings for fabrication notes.

1.5.1.1 Round bar

Each side of the vertical plates is welded all around the round bar, totaling 4 welds. To calculate the moment created by the load, the round bar is assumed to be a beam with the ends fixed, loaded with 5,000 lb at the center, with 6 inches of span. This generates a moment of 3.75kips-in per end. Hence each weld has to resist 1/4 of the total load in shear (1,250lb) and half the end moment (1.9 kips-in). The calculations shown on the attached spread sheet show that the vector sum of the loads only reaches 8% of the allowable.

Hence, welds around the round bar are ***OK***.

---

[1]See Roark and Young, Formulas for Stress and Strain, 6th ed., p.97 and Shigley and Mischke, Mechanical Engineering Design, 5th ed., p.51.

Area=1.57023890e+01

Ixcg=6.13668171e+01
Iycg=3.13388244e+01

Ipolar=9.27056416e+01

Kxcg=1.97689650e+00
Kycg=1.41272778e+00

perimeter: 15.71238898

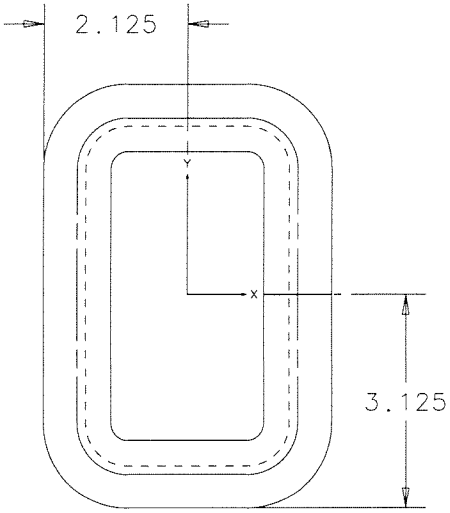

Area=1.02001761e+01

Ixcg=1.47568951e+01
Iycg=1.47296297e+01

Ipolar=2.94865248e+01

Kxcg=1.20280067e+00
Kycg=1.20168898e+00

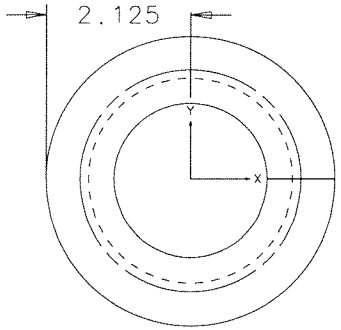

perimeter: 10.21017612

Plotted by rafael on 18-Dec-03 , File: stripline_pene_liftfix_horiz_support.pff

	A	B	C	D
1	Analysis Of Welded Joints	Units	Comment	Value
2	Joint	-	Round bar	-
3	Joint type	-	Tee	-
4	Weld type	-	Fillet	-
5	**Base metals yield strength**	**Fy (ksi)**	Minimum, ASTM A36	**36.00**
6	Allowable Stress	(ksi)	Min.between $0.3.F_{E60XX}$ and $0.4.F_y$	14.40
7	Depth or leg	(in)	From geometry	0.38
8	Eff. throat	(in)	(leg) ^ (1/2)	0.27
9	Length	(in)	From geometry	10.20
10	**Rw**	**(kips/in)**	Eff. throat . Allowable stress	**3.82**
11	Ix	(in^4/in)	Ixcg from I-DEAS	14.73
12	Iy	(in^4/in)	Iycg from I-DEAS	14.73
13	Ip	(in^4/in)	Ipolar = Ixcg + Iycg	29.46
14	xcg	(in)	From geometry	2.13
15	ycg	(in)	From geometry	2.13
16	Sx	(in^3/in)	Ix / ycg	6.93
17	Sy	(in^3/in)	Iy / xcg	6.93
18	Jx	(in^3/in)	Ip / ycg	13.86
19	Jy	(in^3/in)	Ip / xcg	13.86
20	Lx	(kips)	Total X load	0.00
21	Ly	(kips)	Total Y load	1.25
22	Lz	(kips)	Total Z load	0.00
23	Mx	(kips-in)	Total Mx load	1.90
24	My	(kips-in)	Total My load	0.00
25	Mz	(kips-in)	Total Mz load	0.00
26	sx	(kips/in)	Lx / Length	0.00
27	sy	(kips/in)	Ly / Length	0.12
28	sz	(kips/in)	Lz / Length	0.00
29	Rx	(kips/in)	Mx / Sx	0.27
30	Ry	(kips/in)	My / Sy	0.00
31	Rzx	(kips/in)	Mz / Jx	0.00
32	Rzy	(kips/in)	Mz / Jy	0.00
33	Fx (total)	(kips/in)	sx + Rx	0.27
34	Fy (total)	(kips/in)	sy + Ry	0.12
35	Fz (total)	(kips/in)	sz + Rzx + Rzy	0.00
36	**Vector Sum**	**(kips/in)**	{ [(Fx) ^ 2] + [(Fy) ^ 2] + [(Fz) ^ 2] } ^ (1/2)	**0.30**
37	***Vector Sum / Rw***	-	-	**0.08**
38	***Base metal yield strength / Vector Sum***	-	-	**31.79**

1.5.1.2 Tube

Each side of the vertical plates is welded all around the tube, totaling 4 welds. So each weld has to resist 1/4 of the total load in shear (1,250lb).

The FEA shows that there is no significant moment being transferred through this joint. However, to be safe, if the one end of the tube is assumed to be a cantilever beam and 2,500lb are applied to the shoulder screw, a 21.9 kips-in moment is generated and half of that should be resisted by one weld.

Even using these numbers, the calculations shown on the attached spread sheet show that the vector sum of the loads reaches 23% of the allowable.

Hence, welds around the tube are ***OK***.

	A	B	C	D
1	Analysis Of Welded Joints	Units	Comment	Value
2	Joint	-	Tube	-
3	Joint type	-	Tee	-
4	Weld type	-	Fillet	-
5	**Base metals yield strength**	**Fy (ksi)**	Minimum, ASTM A36	**36.00**
6	Allowable Stress	(ksi)	Min.between $0.3.F_{E60XX}$ and $0.4.F_y$	14.40
7	Depth or leg	(in)	From geometry	0.38
8	Eff. throat	(in)	(leg) ^ (1/2)	0.27
9	Length	(in)	From geometry	10.20
10	**Rw**	**(kips/in)**	Eff. throat . Allowable stress	**3.82**
11	Ix	(in^4/in)	Ixcg from I-DEAS	61.36
12	Iy	(in^4/in)	Iycg from I-DEAS	31.38
13	Ip	(in^4/in)	Ipolar = Ixcg + Iycg	92.74
14	xcg	(in)	From geometry	2.13
15	ycg	(in)	From geometry	3.13
16	Sx	(in^3/in)	Ix / ycg	19.64
17	Sy	(in^3/in)	Iy / xcg	14.77
18	Jx	(in^3/in)	Ip / ycg	29.68
19	Jy	(in^3/in)	Ip / xcg	43.64
20	Lx	(kips)	Total X load	0.00
21	Ly	(kips)	Total Y load	1.25
22	Lz	(kips)	Total Z load	0.00
23	Mx	(kips-in)	Total Mx load	2.25
24	My	(kips-in)	Total My load	10.90
25	Mz	(kips-in)	Total Mz load	0.00
26	sx	(kips/in)	Lx / Length	0.00
27	sy	(kips/in)	Ly / Length	0.12
28	sz	(kips/in)	Lz / Length	0.00
29	Rx	(kips/in)	Mx / Sx	0.11
30	Ry	(kips/in)	My / Sy	0.74
31	Rzx	(kips/in)	Mz / Jx	0.00
32	Rzy	(kips/in)	Mz / Jy	0.00
33	Fx (total)	(kips/in)	sx + Rx	0.85
34	Fy (total)	(kips/in)	sy + Ry	0.12
35	Fz (total)	(kips/in)	sz + Rzx + Rzy	0.00
36	**Vector Sum**	**(kips/in)**	{ [(Fx) ^ 2] + [(Fy) ^ 2] + [(Fz) ^ 2] } ^ (1/2)	**0.86**
37	***Vector Sum / Rw***	-	-	**0.23**
38	***Base metal yield strength / Vector Sum***	-	-	**11.08**

2 Drawings

REV	DESCRIPTION	DRAWN	DATE
		APPROVED	DATE

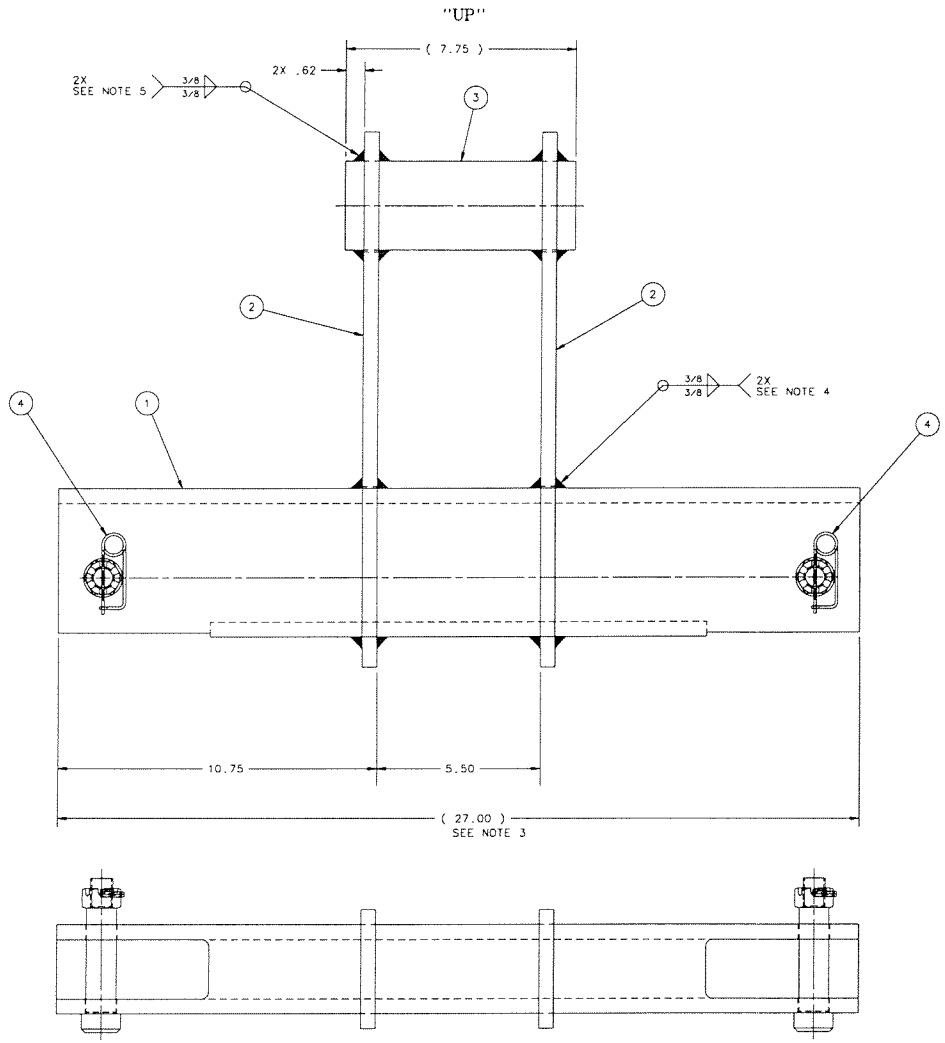

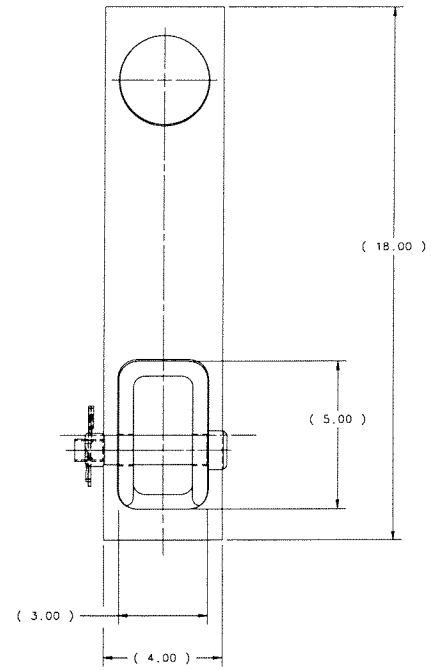

NOTE: 1) EST. WT. = 86.00 LBS.

2) ASSEMBLE ITEM 1 AND 3 INTO ITEM 2 BEFORE WELDING.

3) THIS VIEW SHOWS FIXTURE IN UPSIDE "UP" POSITION.

4) MAKE THIS WELD WITH FIXTURE IN THE "UP" SIDE UP POSITION.

5) MAKE THIS WELD WITH FIXTURE IN THE "UP" SIDE DOWN POSITION.

ITEM	PART NO.	DESCRIPTION OR SIZE	QTY.
4	MC-431670	PIN ASSEMBLY	2
3	MB-431610	TOP SUPPORT	1
2	MC-431609	VERTICAL SUPPORT	2
1	MD-431608	HORIZONTAL SUPPORT	1

PARTS LIST

UNLESS OTHERWISE SPECIFIED			ORIGINATOR	D.TINSLEY	24-NOV-2003
.XX	.XXX	ANGLES	DRAWN	B.ELLISON	02-DEC-2003
± .05	± ***	± **	CHECKED	C.GRIMM	08-JAN-2004
			APPROVED	R.SILVA	13-JAN-2004

1. BREAK ALL SHARP EDGES .015 MAX
2. DO NOT SCALE DRAWING.
3. DIMENSIONS BASED UPON ASME Y14.5M-1994
4. ALL DIMENSIONS ARE INCHES
5. MAX. ALL MACH. SURFACES 125

USED ON

MATERIAL
SEE PARTS LIST ABOVE

FERMI NATIONAL ACCELERATOR LABORATORY
UNITED STATES DEPARTMENT OF ENERGY

PPD/MECHANICAL DEPARTMENT
NUMI PENETRATION STRIPLINE ASSY
LIFTING FIXTURE WELDMENT

SCALE	DRAWING NUMBER	SHEET	REV
1 : 2	8875.111-MD-431607	1 OF 1	

CREATED WITH : Ideas9m3 GROUP: PPD/MECHANICAL DEPARTMENT

REV	DESCRIPTION	DRAWN	DATE
		APPROVED	DATE

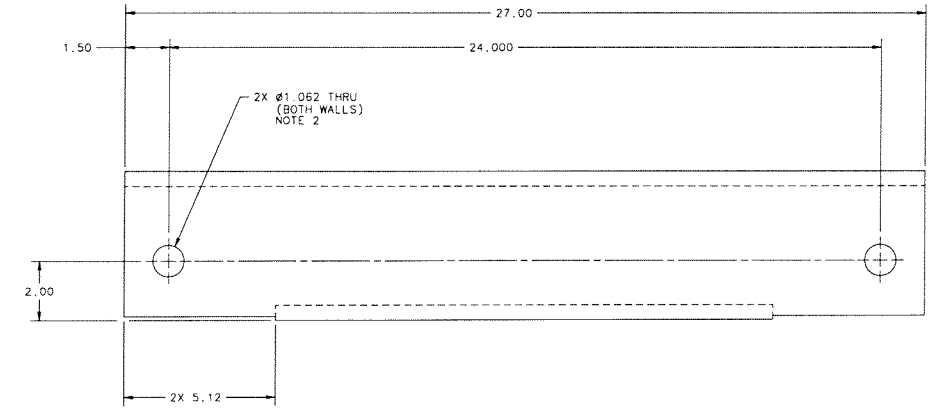

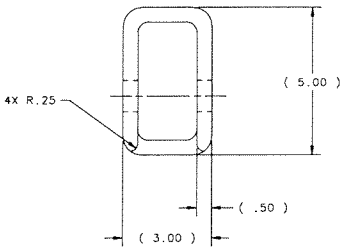

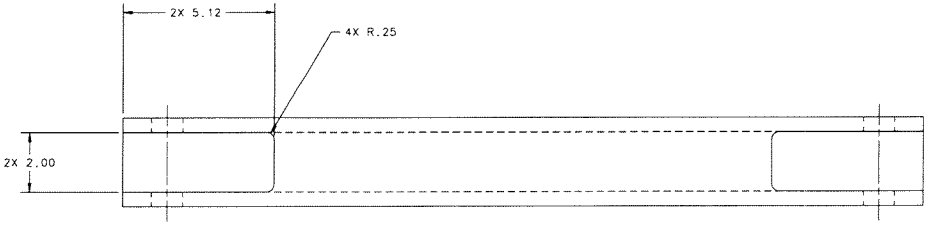

NOTE: 1) EST. WT. = 48.70 LBS.

2) DRILLED WALL FINISH 63 MICROINCHES OR BETTER.

UNLESS OTHERWISE SPECIFIED			ORIGINATOR	D.TINSLEY	24-NOV-2003
.XX	.XXX	ANGLES	DRAWN	B.ELLISON	02-DEC-2003
± .05	± .010	± **	CHECKED	C.GRIMM	08-JAN-2004
1. BREAK ALL SHARP EDGES .015 MAX. 2. DO NOT SCALE DRAWING. 3. DIMENSIONS BASED UPON ASME Y14.5M-1994 4. ALL DIMENSIONS ARE INCHES 5. MAX. ALL MACH. SURFACES 125			APPROVED	R.SILVA	13-JAN-2004
			USED ON	MD-431607	
			MATERIAL	RECTANGULAR TUBE,3 X 5 X 1/2 WALL; ASTM A500 GRADE B STEEL	

FERMI NATIONAL ACCELERATOR LABORATORY
UNITED STATES DEPARTMENT OF ENERGY

PPD/MECHANICAL DEPARTMENT
NUMI PENETRATION STRIPLINE ASSY
LIFTING FIX HORIZONTAL SUPPORT

SCALE	DRAWING NUMBER	SHEET	REV
1 : 2	8875.111-MD-431608	1 OF 1	

CREATED WITH : Ideas9m3 GROUP: PPD/MECHANICAL DEPARTMENT

REV	DESCRIPTION	DRAWN	DATE
		APPROVED	DATE

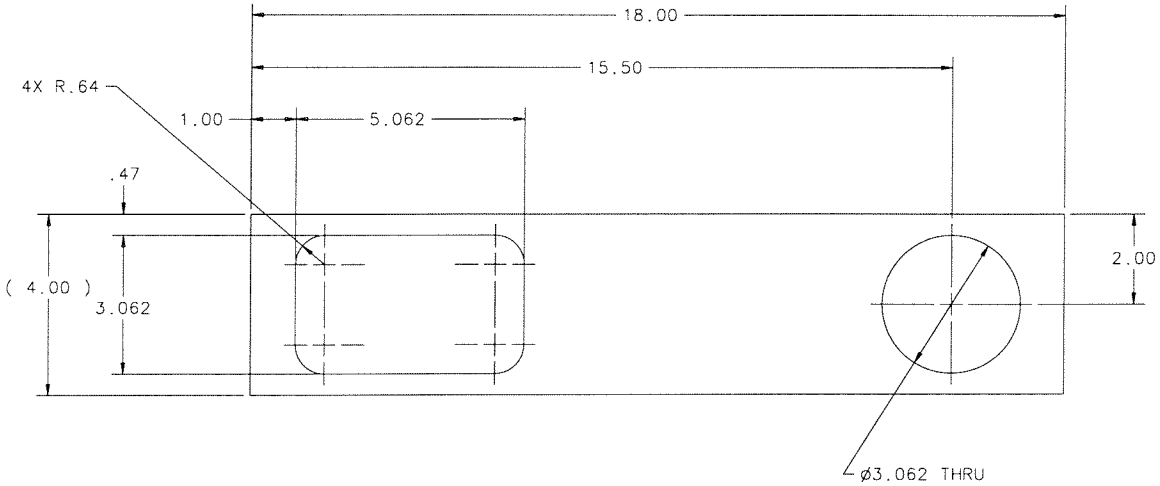

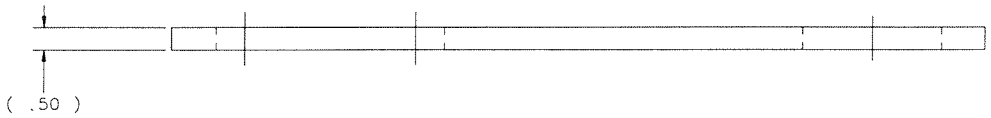

NOTE: 1) EST. WT. = 10.20 LBS.

UNLESS OTHERWISE SPECIFIED			ORIGINATOR	D.TINSLEY	24-NOV-2003
.XX	.XXX	ANGLES	DRAWN	B.ELLISON	02-DEC-2003
± .05	± .010	± **	CHECKED	C.GRIMM	08-JAN-2004
			APPROVED	R.SILVA	13-JAN-2004

1. BREAK ALL SHARP EDGES .015 MAX.
2. DO NOT SCALE DRAWING.
3. DIMENSIONS BASED UPON ASME Y14.5M-1994
4. ALL DIMENSIONS ARE INCHES
5. MAX. ALL MACH. SURFACES 125

USED ON: MD-431607

MATERIAL: FLAT STOCK; .50 X 4; ASTM A36 STEEL

FERMI NATIONAL ACCELERATOR LABORATORY
UNITED STATES DEPARTMENT OF ENERGY

PPD/MECHANICAL DEPARTMENT
NUMI PENETRATION STRIPLINE ASSY
LIFTING FIX VERTICAL SUPPORT

SCALE	DRAWING NUMBER	SHEET	REV
1 : 2	8875.111-MC-431609	1 OF 1	

CREATED WITH : Ideas9m3 | GROUP: PPD/MECHANICAL DEPARTMENT

14

REV	DESCRIPTION	DRAWN	DATE
		APPROVED	DATE

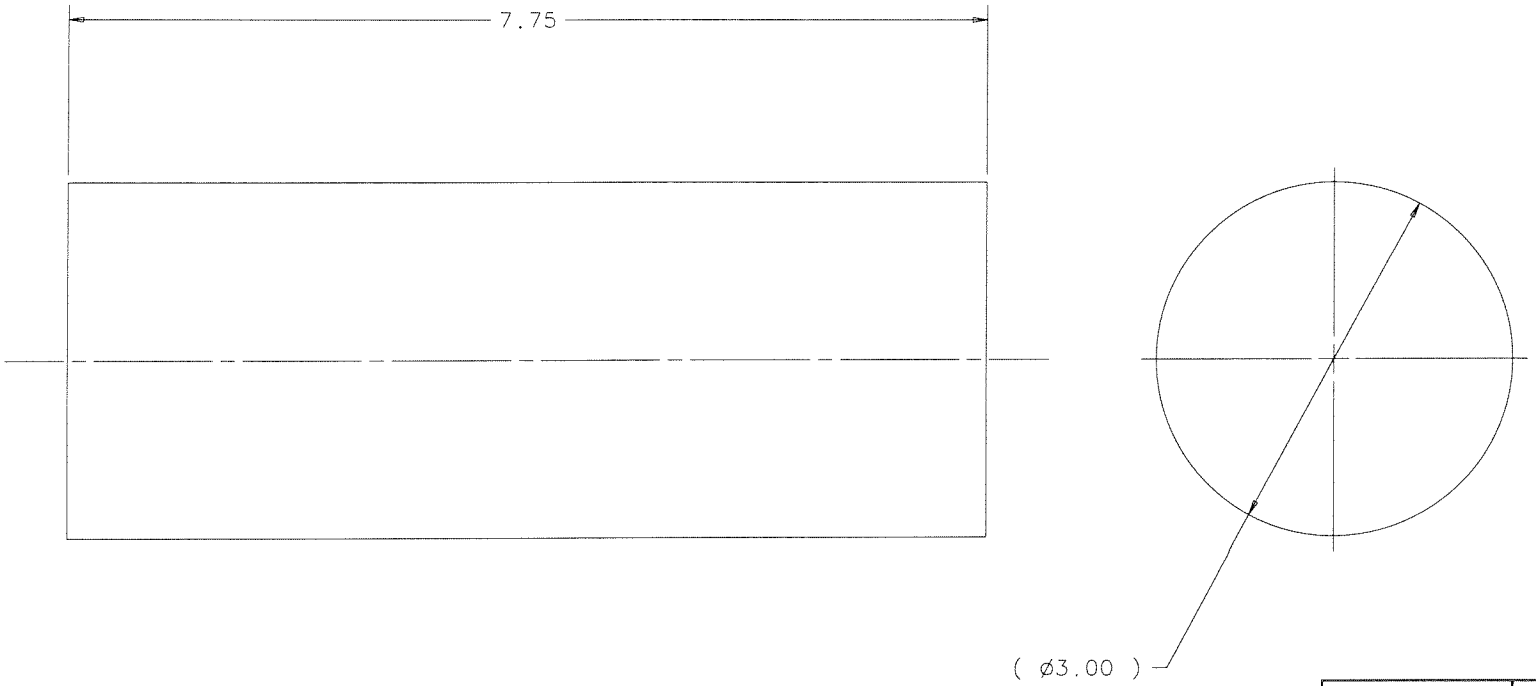

NOTE: 1) EST. WT. = 16.2 LBS.

UNLESS OTHERWISE SPECIFIED			ORIGINATOR	D.TINSLEY	24-NOV-2003
.XX	.XXX	ANGLES	DRAWN	B.ELLISON	02-DEC-2003
± .05	± •••	± ••	CHECKED	C.GRIMM	08-JAN-2004
1. BREAK ALL SHARP EDGES .015 MAX. 2. DO NOT SCALE DRAWING. 3. DIMENSIONS BASED UPON ASME Y14.5M-1994 4. ALL DIMENSIONS ARE INCHES 5. MAX. ALL MACH. SURFACES 125			APPROVED	M.WONG	13-JAN-2004
			USED ON MD-431607		
			MATERIAL ASTM A36 CARBON STEEL ROUND BAR, 3 IN. DIA.		

FERMI NATIONAL ACCELERATOR LABORATORY
UNITED STATES DEPARTMENT OF ENERGY

PPD/MECHANICAL DEPARTMENT
NUMI PENETRATION STRIPLINE ASSY
LIFTING FIXTURE TOP SUPPORT

SCALE	DRAWING NUMBER	SHEET	REV
1 : 1	8875.111-MB-431610	1 OF 1	

CREATED WITH : Ideas9m3 | GROUP: PPD/MECHANICAL DEPARTMENT

REV	DESCRIPTION	DRAWN	DATE
		APPROVED	DATE

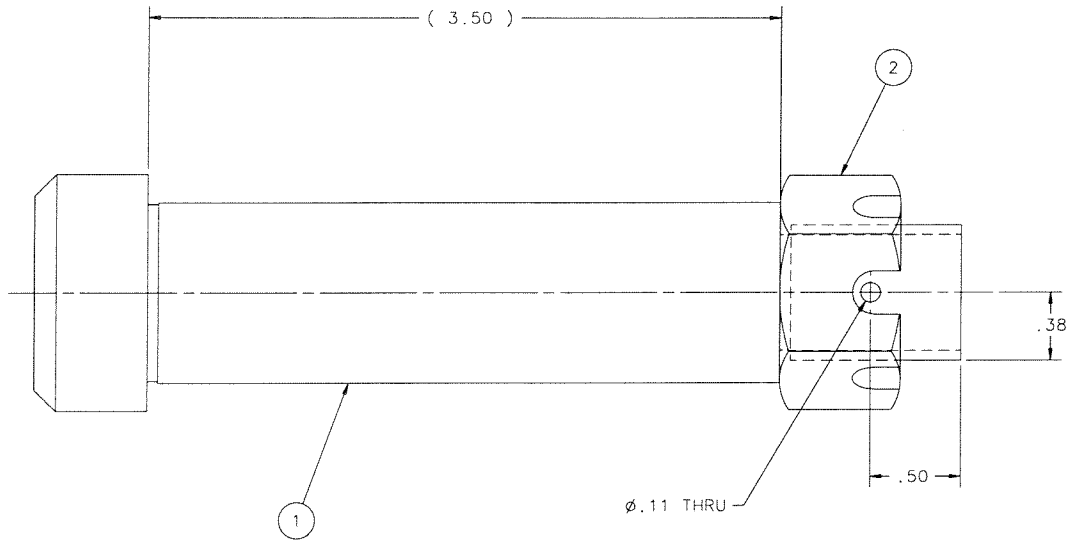

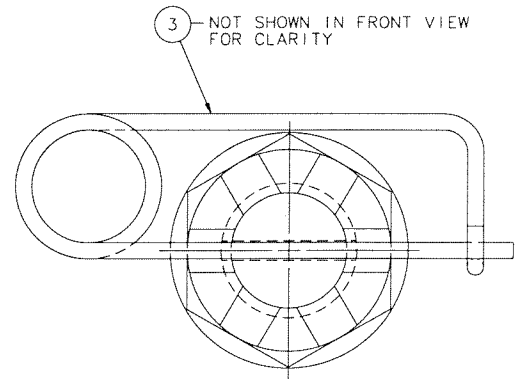

ITEM	PART NO.	DESCRIPTION OR SIZE	QTY.
3	90174A114	COIL TENSION SAFETY PIN; McMASTER-CARR	1
2	95030A260	3/4-10 UNC SLOTTED NUT; McMASTER-CARR	1
1	91259A140	1" SHOULDER SCREW X 3-1/2 LG.; McMASTER-CARR	1

PARTS LIST

UNLESS OTHERWISE SPECIFIED					
.XX	.XXX	ANGLES	ORIGINATOR	R.SILVA	07-JAN-2004
± .02	± •••	± ••	DRAWN	B.ELLISON	07-JAN-2004
			CHECKED	C.GRIMM	08-JAN-2004
			APPROVED	R.SILVA	13-JAN-2004

1. BREAK ALL SHARP EDGES .015 MAX.
2. DO NOT SCALE DRAWING.
3. DIMENSIONS BASED UPON ASME Y14.5M-1994
4. ALL DIMENSIONS ARE INCHES
5. MAX. ALL MACH. SURFACES 125

USED ON: MD-431607

MATERIAL: SEE PARTS LIST ABOVE

FERMI NATIONAL ACCELERATOR LABORATORY
UNITED STATES DEPARTMENT OF ENERGY

PPD/MECHANICAL DEPARTMENT
NUMI PENETRATION STRIPLINE ASSY
LIFTING FIXTURE PIN ASSEMBLY

SCALE	DRAWING NUMBER	SHEET	REV
2 : 1	8875.111-MC-431670	1 OF 1	

CREATED WITH : Ideas9m3 | GROUP: PPD/MECHANICAL DEPARTMENT

REV	DESCRIPTION	DRAWN	DATE
		APPROVED	DATE

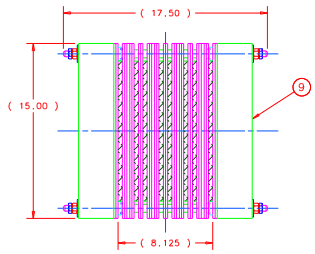

SECTION A–A
SCALE = 1:4

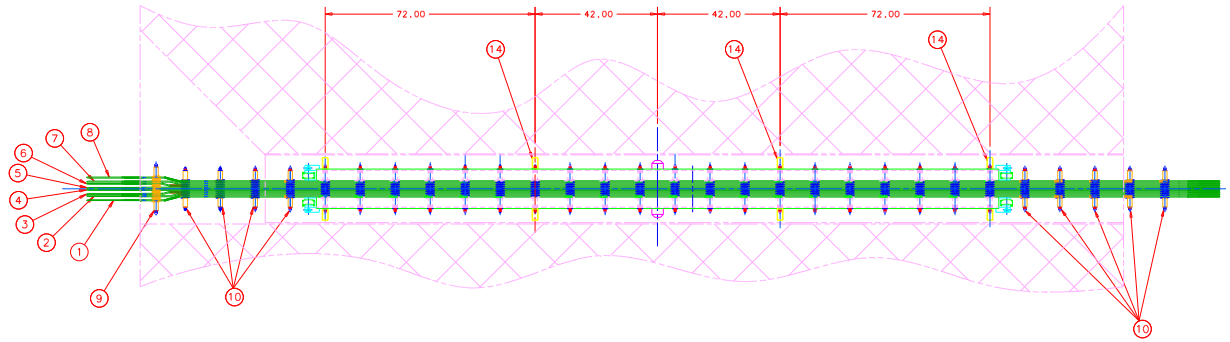

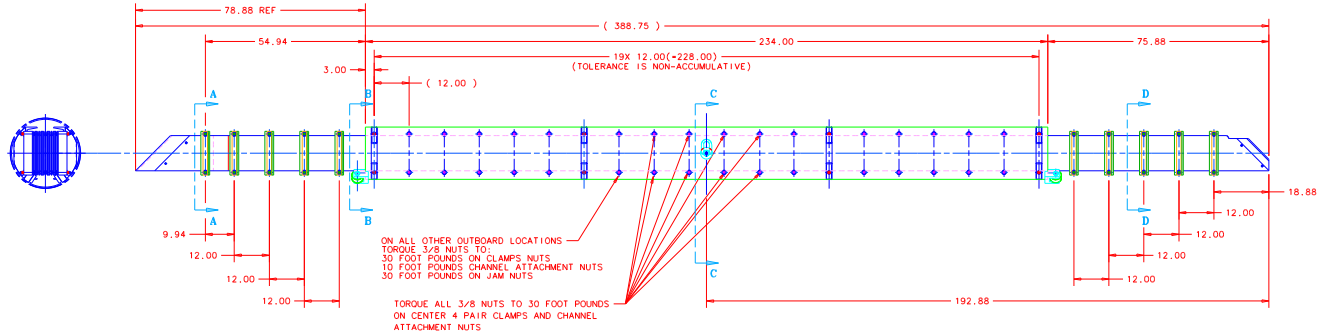

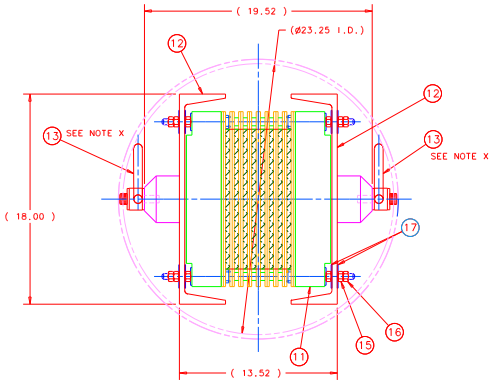

SECTION B–B
SCALE = 1:4

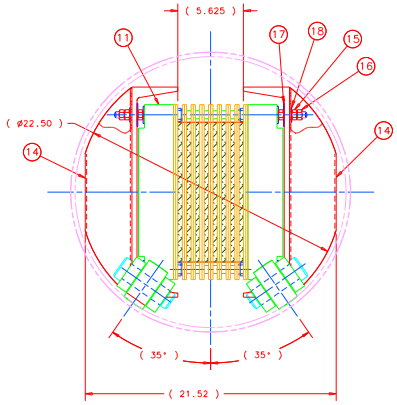

SECTION C–C
SCALE = 1:4

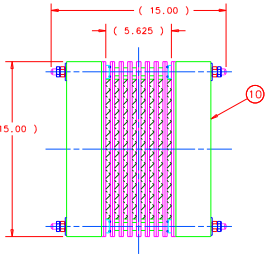

SECTION D–D
SCALE = 1:4

ITEM	PART NO.	DESCRIPTION OR SIZE	QTY.
18	COML	PLAIN FLAT WASHER, ø.500 I.D. X ø1.25 O.D. 18-8 STN. STL.(McMASTER-CARR P/N 92141A033 OR EQ.)	16
17	COML	LARGE O.D. FLAT WASHER, ø.500 I.D. X ø2.00 O.D. 18-8 STN. STL.(McMASTER-CARR P/N 90313A110 OR EQ.)	64
16	COML	HEX JAM NUT, ø.500-20 UNF, 18-8 STN. STL.	80
15	COML	FULL HEX NUT, ø.500-20 UNF, 18-8 STN. STL.	80
14	MD-431535	BAFFLE	8
13	COML	HOIST RING, 4,000 LB. LOAD LIMIT, 5/8-11 THREAD, FORGED STEEL(McMASTER-CARR P/N 2896T68 OR EQ.)	2
12	MD-431561	STRONgBACK CHANNEL ASSEMBLY	2
11	MD-431532	ALUMINUM CLAMP ASSEMBLY CONFIGURATION 9	20
10	MD-431353	ALUMINUM CLAMP ASSEMBLY CONFIGURATION 1	9
9	MD-431530	ALUMINUM CLAMP ASSEMBLY CONFIGURATION 8	1
8	MD-431115	CONDUCTOR #8 – PLATED	1
7	MD-431114	CONDUCTOR #7 – PLATED	1
6	MD-431113	CONDUCTOR #6 – PLATED	1
5	MD-431112	CONDUCTOR #5 – PLATED	1
4	MD-431111	CONDUCTOR #4 – PLATED	1
3	MD-431110	CONDUCTOR #3 – PLATED	1
2	MD-431109	CONDUCTOR #2 – PLATED	1
1	MD-431108	CONDUCTOR #1 – PLATED	1

PARTS LIST

UNLESS OTHERWISE SPECIFIED			ORIGINATOR	D.TINSLEY	20-OCT-2003
.XX	.XXX	ANGLES	DRAWN	D.ARNOLD	05-NOV-2003
±	±	± 1°	CHECKED		
			APPROVED		
			USED ON	MX-XXXXXX	
			MATERIAL	SEE PARTS LIST ABOVE	

1. BREAK ALL SHARP EDGES .015 MAX.
2. DO NOT SCALE DRAWING.
3. DIMENSIONS BASED UPON ANSI Y14.5M-1982.
4. ALL DIMENSIONS ARE INCHES
5. MAX. ALL MACH. SURFACES 125

FERMI NATIONAL ACCELERATOR LABORATORY
UNITED STATES DEPARTMENT OF ENERGY

PPD/MECHANICAL DEPARTMENT
NUMI PENETRATION STRIPLINE
MAIN ASSEMBLY

SCALE	DRAWING NUMBER	SHEET	REV
1:16 & NOTED	8875.111-ME-431563	1 OF 1	

CREATED WITH : Ideas9m3 GROUP: PPD/MECHANICAL DEPARTMENT

Plotted by rafael on 06-Feb-04 , File: Stripline_pene_mainassy.pff