REV	DESCRIPTION	DRAWN	DATE
		APPROVED	DATE
A	REVISED AND DELETED #6. DELETED BOTTOM PLATE. REVISED END PLATE.	B. CYKO	02-22-02
		RAFAEL SILVA	02-27-02
B	REV. WRIGHT BLOCK HEIGHT, WAS 82.72; DIMENSION 8.77, WAS 8.47	PAT POLL	03-05-02

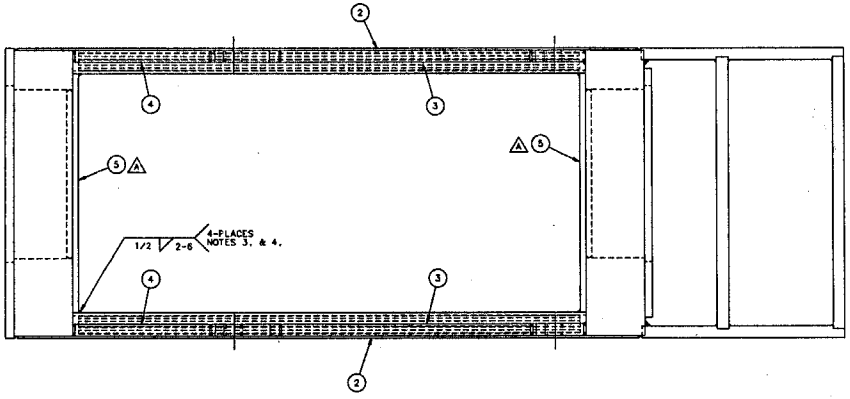

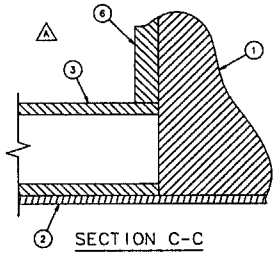

SECTION C-C
SCALE: 1/2

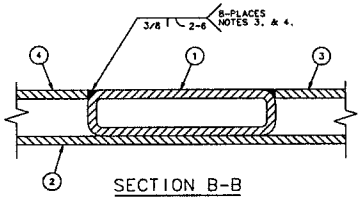

SECTION B-B
SCALE: 1/2

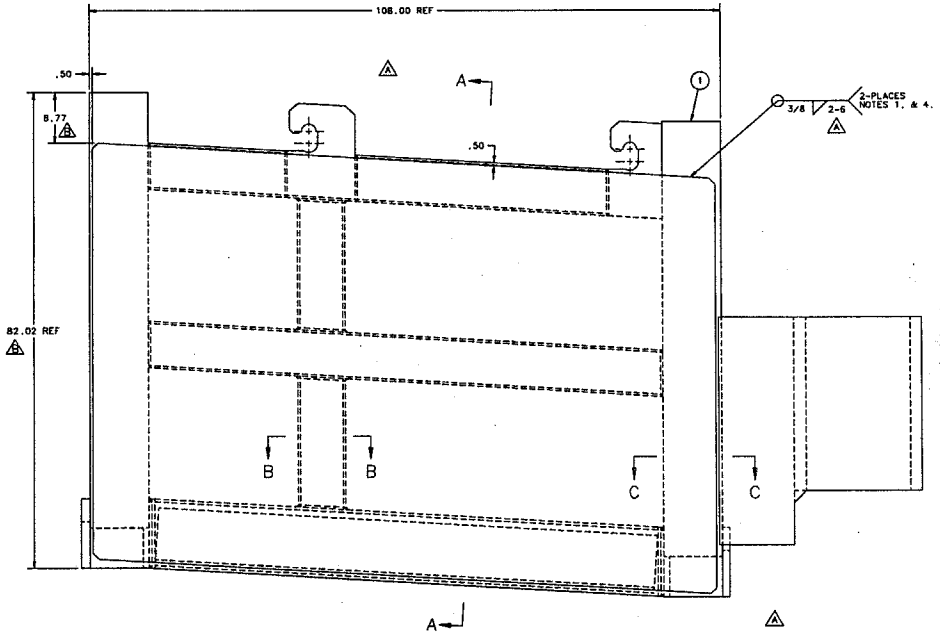

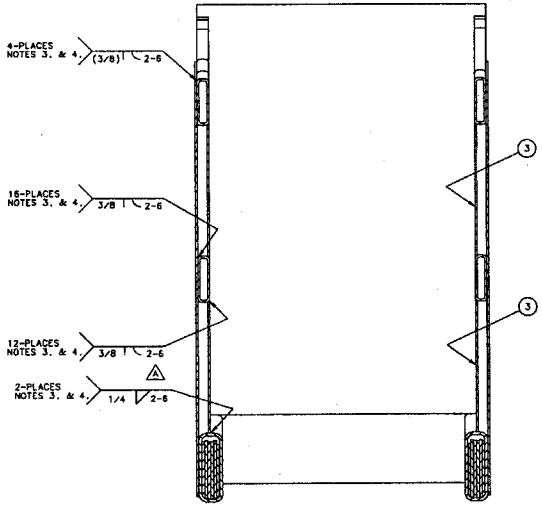

SECTION A-A

ITEM	PART NO.	DESCRIPTION OR SIZE	QTY.
5	COML	PLATE, 1" x 41.93 x 12.00 CARBON STEEL ASTM A36	2
4	MC-406378	INSIDE PANEL "B"	4
3	MC-406377	INSIDE PANEL "A"	4
2	MC-406351	SIDE COVER	2
1	ME-406455	MODULE WELDMENT	1

PARTS LIST

UNLESS OTHERWISE SPECIFIED			ORIGINATOR	R.SILVA	23-OCT-2001
.XX	.XXX	ANGLES	DRAWN	B.CYKO	23-OCT-2001
± .03	±	±	CHECKED	C. MILA	14-NOV-2001
			APPROVED	R. SILVA	14-NOV-2001

1. BREAK ALL SHARP EDGES .015 MAX.
2. DO NOT SCALE DRAWING.
3. DIMENSIONS ARE BASED UPON FINISHED PARTS.
4. BRK. ALL MACH. SURFACES 125 √

USED ON: ME-406481

MATERIAL: SEE ABOVE PARTS LIST

FERMI NATIONAL ACCELERATOR LABORATORY
UNITED STATES DEPARTMENT OF ENERGY

PPD/MECHANICAL DEPT.
HORN1 ASSY.
MODULE COVER & PANEL WELDMENT

SCALE	DRAWING NUMBER	SHEET	REV
1/8 & AS NOTED	8875.111-ME-406239	1 OF 1	B

CREATED WITH: Intellicad | GROUP: PPD/MECHANICAL DEPARTMENT

NOTES:

1. BASE METAL TEMPERATURE FOR 10" PLATES SHOULD BE 225°F MINIMUM.
2. BASE METAL TEMPERATURE FOR 2" PLATES SHOULD BE 225°F MINIMUM.
3. BASE METAL TEMPERATURE FOR CARBON STEEL PARTS, EXCEPT FOR 2" AND 10" PLATES, SHOULD BE 70°F MINIMUM.
4. FOR CARBON STEEL PARTS USE ONLY LOW HYDROGEN ELECTRODE E70XX MINIMUM.
5. FOR STAINLESS STEEL PARTS USE ELECTRODE 309. DO NOT PRE-HEAT OR USE INTERPASS HEATING.

REV	DESCRIPTION	DRAWN	DATE
A	ADDED "USED ON" DW.	B. CYKO	02-26-02

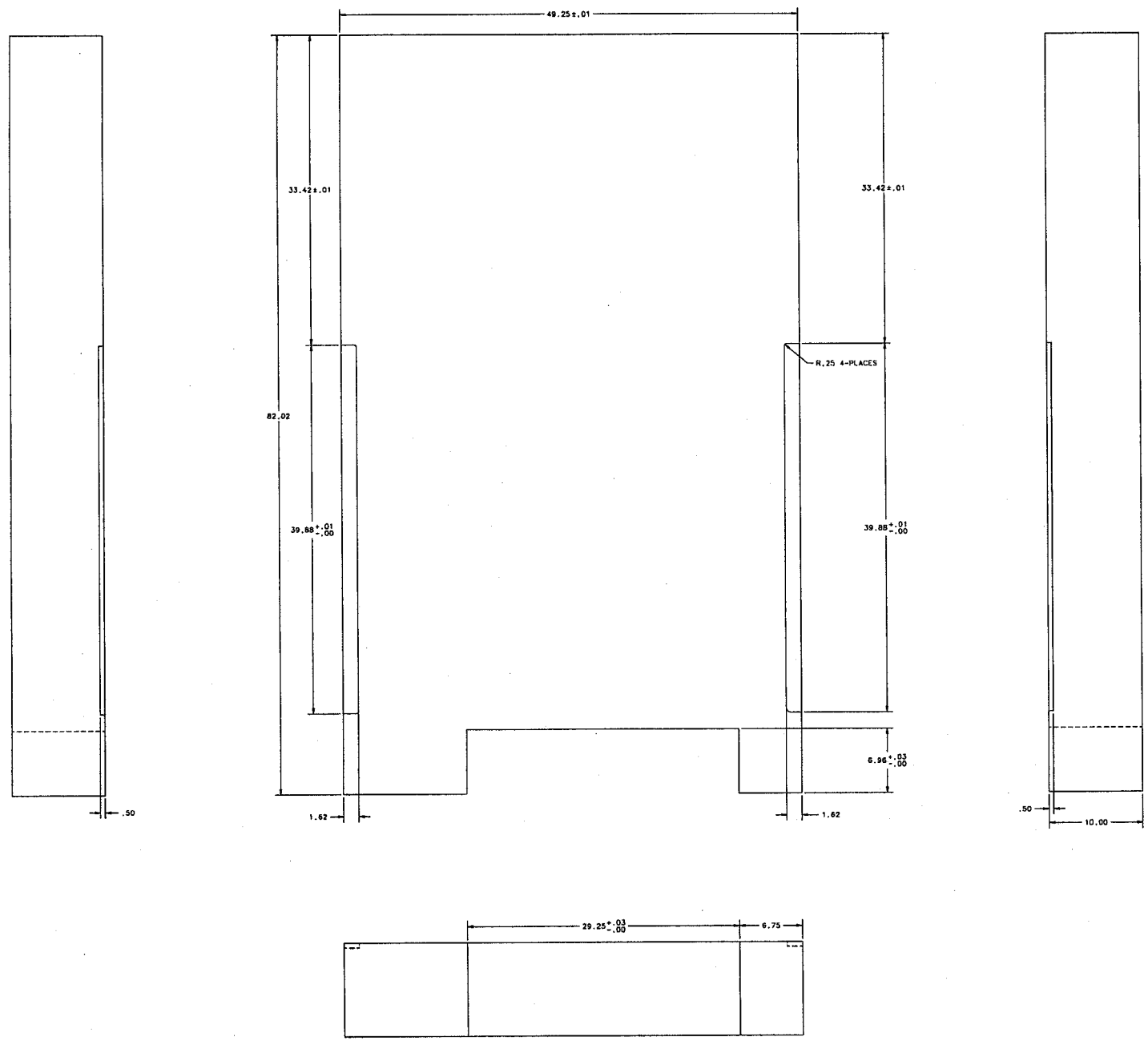

UNLESS OTHERWISE SPECIFIED			ORIGINATOR	R.SILVA	25-JUN-2001
.XX	.XXX	ANGLES	DRAWN	H.CYKO	25-JUN-2001
± .03	±	±	CHECKED	C.NILA	08-NOV-2001
1. BREAK ALL SHARP EDGES .015 MAX.			APPROVED	R.SILVA	08-NOV-2001
2. DO NOT SCALE DRAWING.			USED ON	ME-406455	
3. DIMENSIONS BASED UPON ANSI Y14.5M-1982			MATERIAL	H.R. CARBON STEEL, ASTM A36	
4. MAX. ALL MACH. SURFACES 125					

FERMI NATIONAL ACCELERATOR LABORATORY
UNITED STATES DEPARTMENT OF ENERGY

PPD/MECHANICAL DEPT.
HORN1 ASSY.
DS MODULE BLOCK

SCALE	DRAWING NUMBER	SHEET	REV
1/4	8875.111-ME-406240	1 OF 1	A

CREATED WITH : Idesa8m4 GROUP: PPD/MECHANICAL DEPARTMENT

Z-FRONT

REV	DESCRIPTION	DRAWN	DATE
A	ADDED "USED ON" Dim.	B. CYKO	02-26-02
		APPROVED	DATE

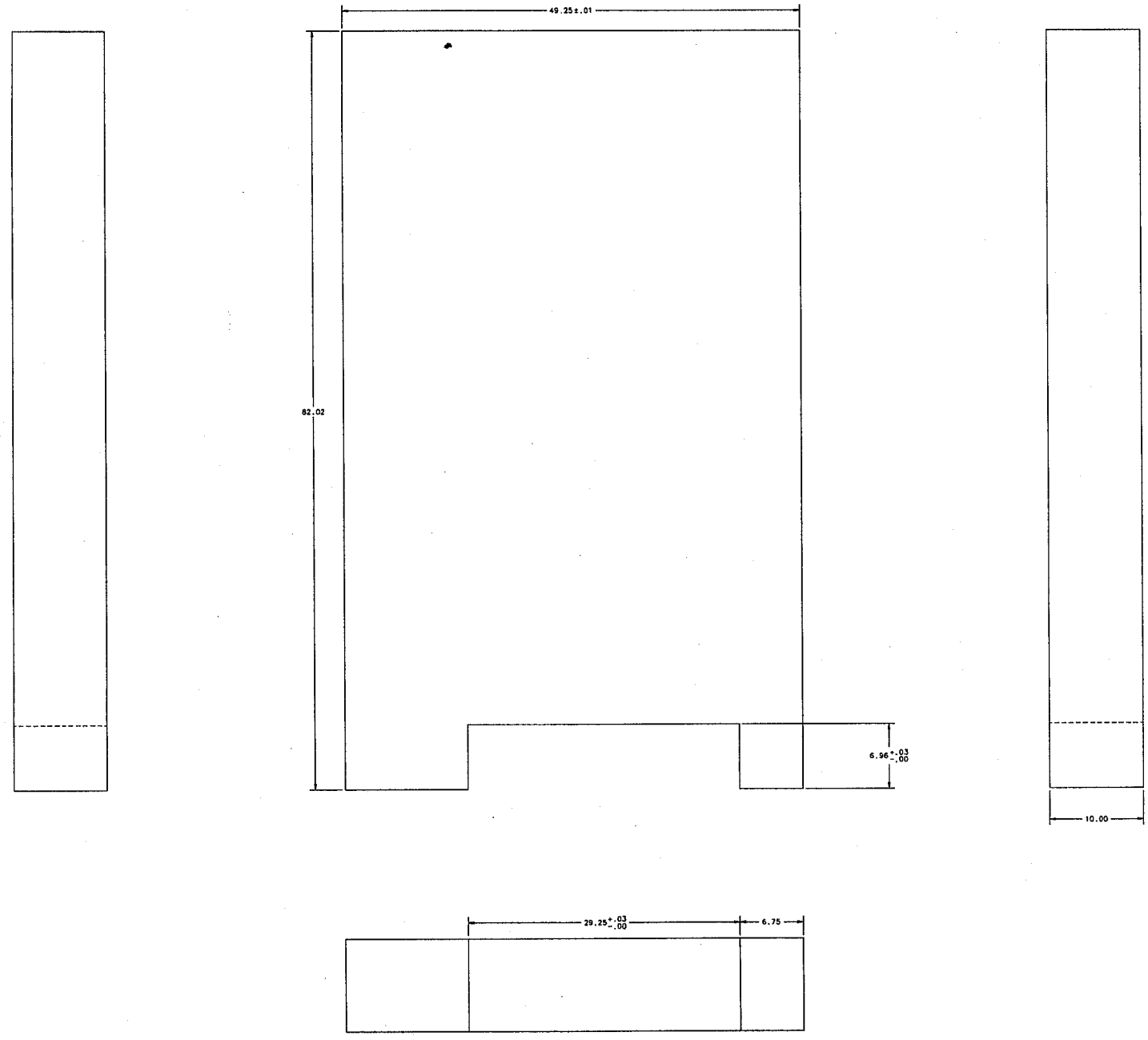

UNLESS OTHERWISE SPECIFIED			ORIGINATOR	R.SILVA	25-JUN-2001
.XX	.XXX	ANGLES	DRAWN	W.CYKO	25-JUN-2001
± .03	±	±	CHECKED	C.HILA	08-NOV-2001
1. BREAK ALL SHARP EDGES .010 MAX. 2. DO NOT SCALE DRAWING. 3. DIMENSIONS BASED UPON ANSI Y14.5M-1982. 4. RMS. ALL MACH. SURFACES 125			APPROVED	R.SILVA	08-NOV-2001
			USED ON	△ME-406455	
			MATERIAL	H.R. CARBON STEEL, ASTM A36	

FERMI NATIONAL ACCELERATOR LABORATORY
UNITED STATES DEPARTMENT OF ENERGY

PPD/MECHANICAL DEPT.
HORN1 ASSY.
US MODULE BLOCK

SCALE	DRAWING NUMBER	SHEET	REV
1/4	8875.111-ME-406241	1 OF 1	A

CREATED WITH : Ideas8x4 GROUP: PPD/MECHANICAL DEPARTMENT

2-FRONT

REV	DESCRIPTION	DRAWN / APPROVED	DATE
A	REVISED PLATE CONFIGURATION	B. CYKO	02-22-02
		RAFAEL SILVA	02-27-02
B	ADDED WIDTH DIMENSION	PAT POLL	03-05-02

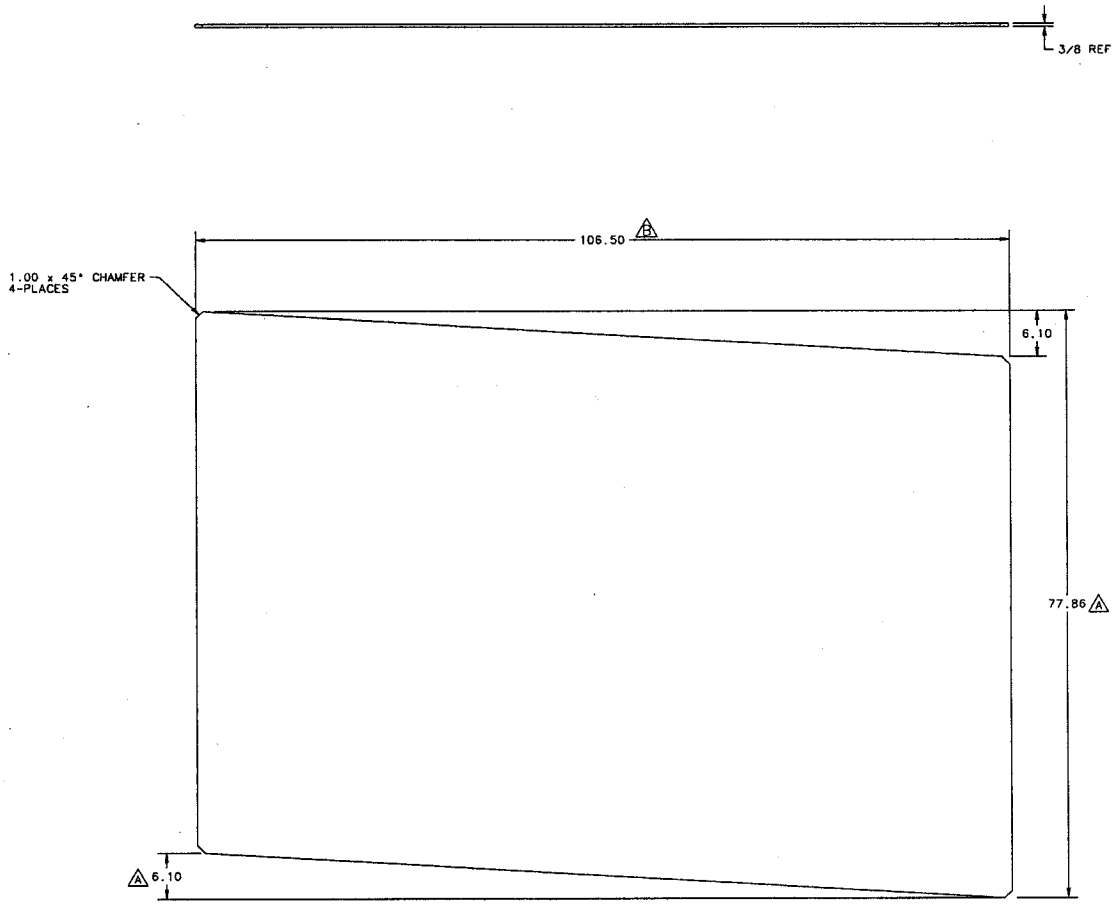

UNLESS OTHERWISE SPECIFIED			ORIGINATOR	R.SILVA	12-OCT-2001
.XX	.XXX	ANGLES	DRAWN	W.CYKO	12-OCT-2001
± .02	±	± 2°	CHECKED	C.NILA	09-NOV-2001
			APPROVED	R.SILVA	09-NOV-2001
			USED ON	ME-406239	
			MATERIAL	PLATE, 3/8, CARBON STEEL ASTM A36	

1. BREAK ALL SHARP EDGES .015 MAX.
2. DO NOT SCALE DRAWING.
3. DIMENSIONS BASED UPON ANSI Y14.5M-1982
4. MAX. ALL MACH. SURFACES 250

FERMI NATIONAL ACCELERATOR LABORATORY
UNITED STATES DEPARTMENT OF ENERGY

PPD/MECHANICAL DEPT.
HORN1 ASSY.
SIDE COVER, MODULE

SCALE	DRAWING NUMBER	SHEET	REV
1/8	8875.111-MD-406351	1 OF 1	B

CREATED WITH : Idecs8m4 GROUP: PPD/MECHANICAL DEPARTMENT

REV	DESCRIPTION	DRAWN / APPROVED	DATE / DATE
A	ADDED "USED ON" DWG. NO.	B. CYKO	02-26-02

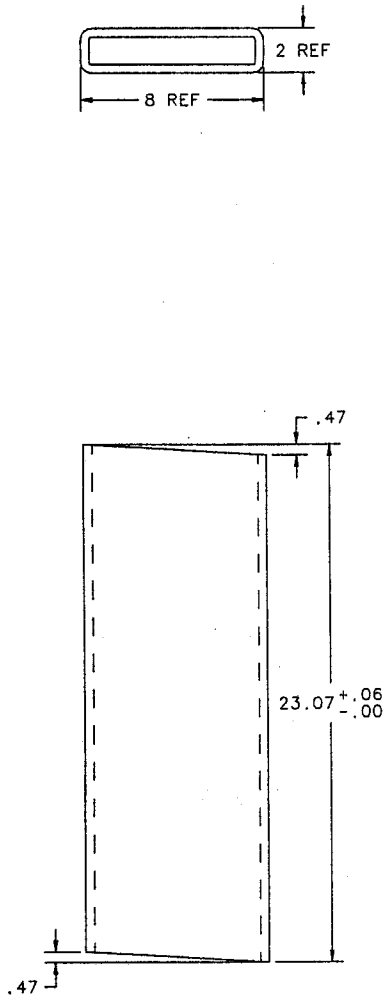

UNLESS OTHERWISE SPECIFIED			ORIGINATOR	R.SILVA	15-OCT-2001
.XX	.XXX	ANGLES	DRAWN	W.CYKO	15-OCT-2001
± .02	±	±	CHECKED	C.NILA	09-NOV-2001
			APPROVED	R.SILVA	09-NOV-2001

1. BREAK ALL SHARP EDGES .015 MAX.
2. DO NOT SCALE DRAWING.
3. DIMENSIONS BASED UPON ANSI Y14.5M-1982
4. MAX. ALL MACH. SURFACES 250

USED ON: A ME-406455

MATERIAL: 8 X 2 X 3/8 WALL RECT. TUBING CARBON STEEL A500 GR. B

FERMI NATIONAL ACCELERATOR LABORATORY
UNITED STATES DEPARTMENT OF ENERGY

PPD/MECHANICAL DEPT.
HORN1 ASSY.
FRAME TUBE "A", MODULE WELDMENT

SCALE	DRAWING NUMBER	SHEET	REV
1/4	8875.111-MC-406352	1 OF 1	A

CREATED WITH : IdeasBm4 | GROUP: PPD/MECHANICAL DEPARTMENT

REV	DESCRIPTION	DRAWN / APPROVED	DATE / DATE
A	ADDED "USED ON" DWG. NO.	B. CYKO	02-26-02

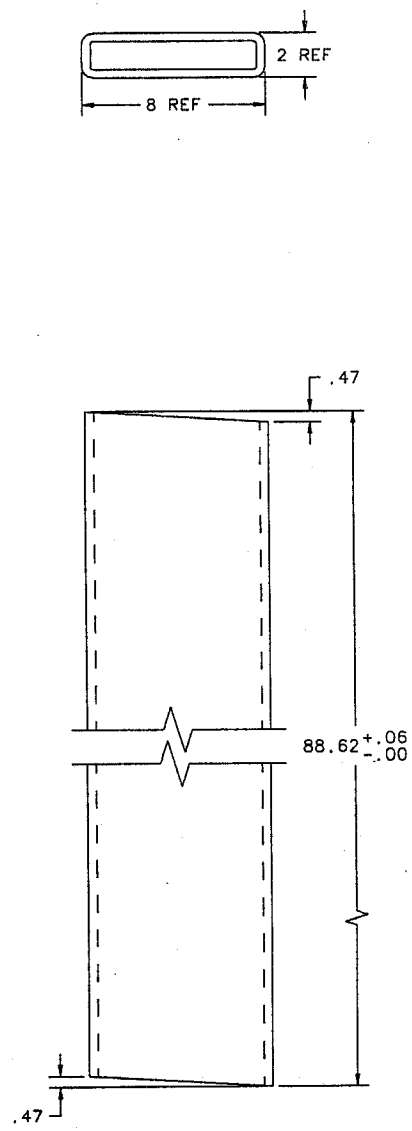

UNLESS OTHERWISE SPECIFIED					
.XX	.XXX	ANGLES	ORIGINATOR	R.SILVA	15-OCT-2001
± .02	±	±	DRAWN	W.CYKO	15-OCT-2001
			CHECKED	C.NILA	09-NOV-2001
			APPROVED	R.SILVA	09-NOV-2001

1. BREAK ALL SHARP EDGES .015 MAX.
2. DO NOT SCALE DRAWING.
3. DIMENSIONS BASED UPON ANSI Y14.5M-1982
4. MAX. ALL MACH. SURFACES 250

USED ON: A ME-406455

MATERIAL: 8 X 2 X 3/8 WALL RECT. TUBING CARBON STEEL A500 GR. B

FERMI NATIONAL ACCELERATOR LABORATORY
UNITED STATES DEPARTMENT OF ENERGY

PPD/MECHANICAL DEPT.
HORN1 ASSY.
FRAME TUBE "B", MODULE WELDMENT

SCALE	DRAWING NUMBER	SHEET	REV
1/4	8875.111-MC-406353	1 OF 1	A

CREATED WITH : IdeasBm4 | GROUP: PPD/MECHANICAL DEPARTMENT

REV	DESCRIPTION	DRAWN	DATE
		APPROVED	DATE
A	ADDED "USED ON" DWG. NO.	B. CYKO	02-26-02

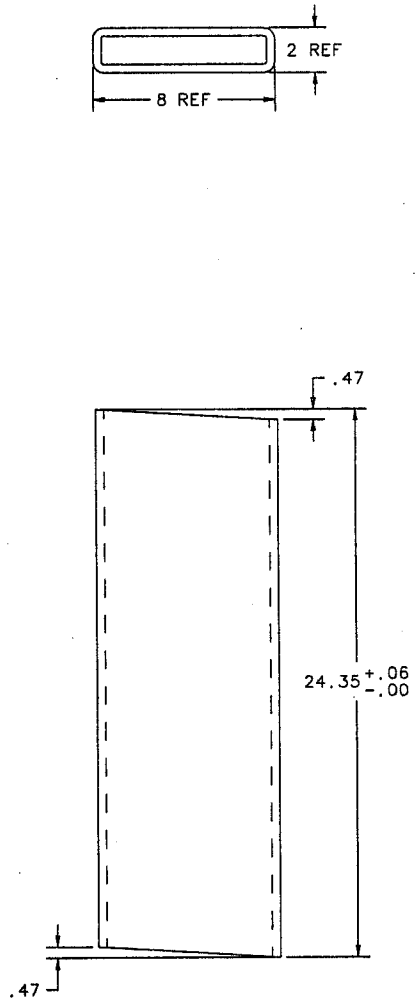

UNLESS OTHERWISE SPECIFIED			ORIGINATOR	R.SILVA	15-OCT-2001
.XX	.XXX	ANGLES	DRAWN	W.CYKO	15-OCT-2001
± .02	±	±	CHECKED	C.NILA	09-NOV-2001
1. BREAK ALL SHARP EDGES .015 MAX. 2. DO NOT SCALE DRAWING. 3. DIMENSIONS BASED UPON ANSI Y14.5M-1982 4. MAX. ALL MACH. SURFACES 250			APPROVED	R.SILVA	09-NOV-2001
			USED ON	A ME-406455	
			MATERIAL	8 X 2 X 3/8 WALL RECT. TUBING CARBON STEEL A500 GR. B	

FERMI NATIONAL ACCELERATOR LABORATORY
UNITED STATES DEPARTMENT OF ENERGY

PPD/MECHANICAL DEPT.
HORN1 ASSY.
FRAME TUBE "C", MODULE WELDMENT

SCALE	DRAWING NUMBER	SHEET	REV
1/4	8875.111-MC-406354	1 OF 1	A

CREATED WITH : IdeasBm4 | GROUP: PPD/MECHANICAL DEPARTMENT

REV	DESCRIPTION	DRAWN	DATE
		APPROVED	DATE
A	ADDED "USED ON" DWG. NO.	B. CYKO	02-26-02

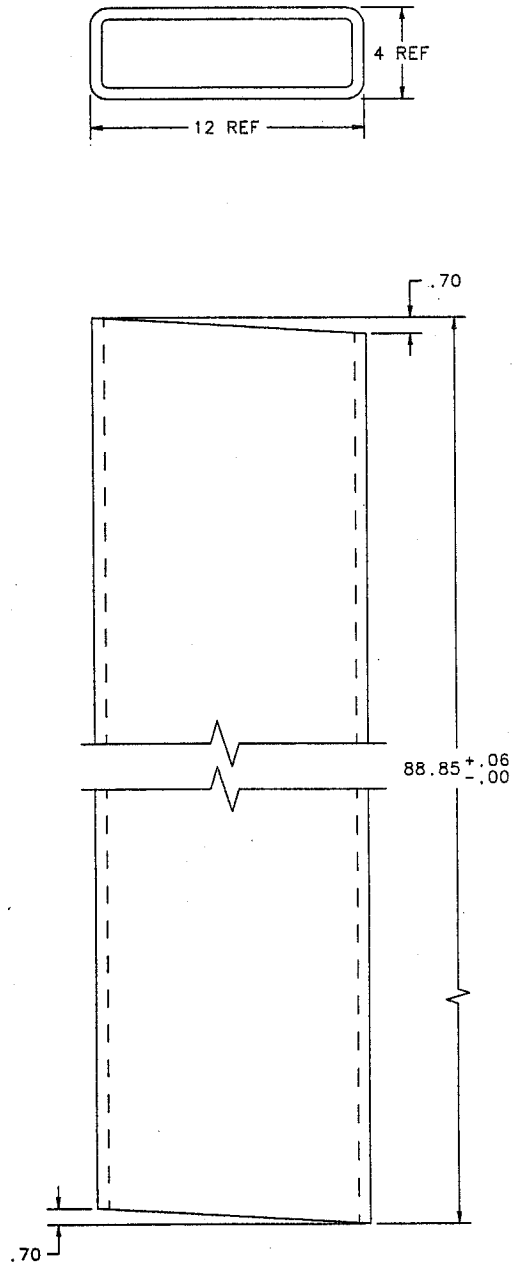

UNLESS OTHERWISE SPECIFIED			ORIGINATOR	R.SILVA	15-OCT-2001
.XX	.XXX	ANGLES	DRAWN	W.CYKO	15-OCT-2001
± .02	±	±	CHECKED	C.NILA	09-NOV-2001
1. BREAK ALL SHARP EDGES .015 MAX. 2. DO NOT SCALE DRAWING. 3. DIMENSIONS BASED UPON ANSI Y14.5M-1982 4. MAX. ALL MACH. SURFACES 250			APPROVED	R.SILVA	09-NOV-2001
			USED ON	A ME-406455	
			MATERIAL	12 X 4 X 1/2 WALL RECT. TUBING CARBON STEEL A500 GR. B	

FERMI NATIONAL ACCELERATOR LABORATORY
UNITED STATES DEPARTMENT OF ENERGY

PPD/MECHANICAL DEPT.
HORN1 ASSY.
FRAME TUBE "D", MODULE WELDMENT

SCALE	DRAWING NUMBER	SHEET	REV
1/4	8875.111-MC-406355	1 OF 1	A

CREATED WITH : IdeasBm4 GROUP: PPD/MECHANICAL DEPARTMENT

REV	DESCRIPTION	DRAWN / APPROVED	DATE / DATE
A	ADDED "USED ON" DWG. NO.	B. CYKO	02-26-02

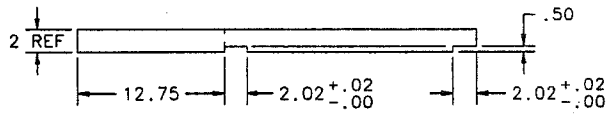

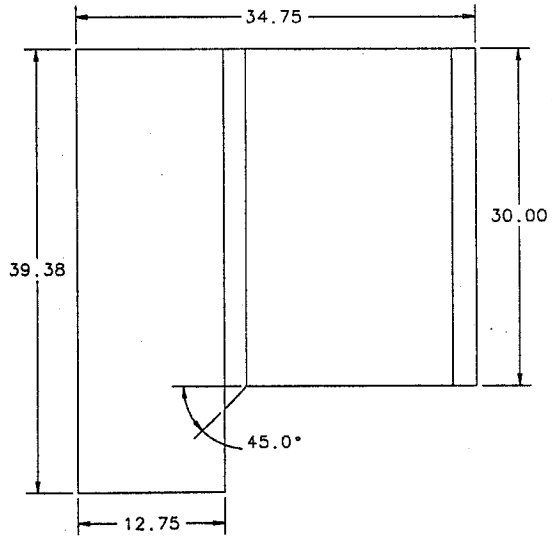

UNLESS OTHERWISE SPECIFIED			ORIGINATOR	R.SILVA	16-OCT-2001
.XX	.XXX	ANGLES	DRAWN	W.CYKO	16-OCT-2001
± .02	±	± 2°	CHECKED	C.NILA	09-NOV-2001
			APPROVED	R.SILVA	09-NOV-2001

1. BREAK ALL SHARP EDGES .015 MAX.
2. DO NOT SCALE DRAWING.
3. DIMENSIONS BASED UPON ANSI Y14.5M-1982
4. MAX. ALL MACH. SURFACES 125

USED ON: A ME-406455

MATERIAL: PLATE, 2" THK., STN. STL. 304

FERMI NATIONAL ACCELERATOR LABORATORY
UNITED STATES DEPARTMENT OF ENERGY

PPD/MECHANICAL DEPT.
HORN1 ASSY.
SIDE PLATE, RH, MODULE WELDMENT

SCALE	DRAWING NUMBER	SHEET	REV
1/8	8875.111-MC-406371	1 OF 1	A

CREATED WITH : IdeasBm4 | GROUP: PPD/MECHANICAL DEPARTMENT

REV	DESCRIPTION	DRAWN	DATE
		APPROVED	DATE
A	ADDED "USED ON" DWG. NO.	B. CYKO	02-26-02

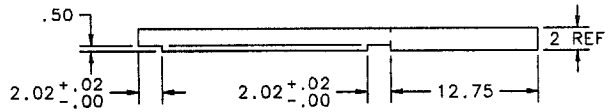

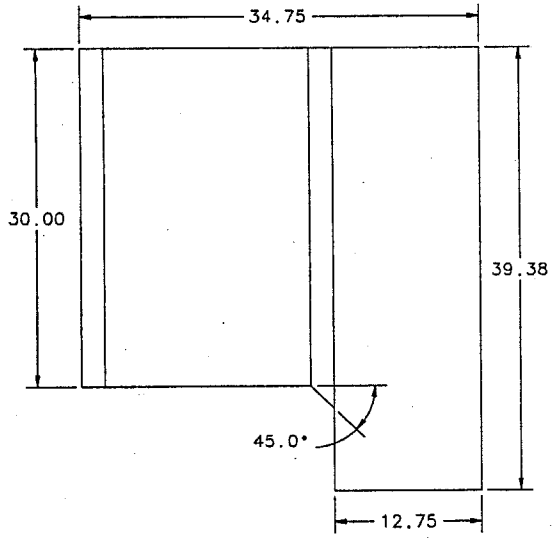

UNLESS OTHERWISE SPECIFIED			ORIGINATOR	R.SILVA	16-OCT-2001
.XX	.XXX	ANGLES	DRAWN	W.CYKO	16-OCT-2001
± .02	±	± 2°	CHECKED	C.NILA	09-NOV-2001
1. BREAK ALL SHARP EDGES .015 MAX. 2. DO NOT SCALE DRAWING. 3. DIMENSIONS BASED UPON ANSI Y14.5M-1982 4. MAX. ALL MACH. SURFACES 125			APPROVED	R.SILVA	09-NOV-2001
			USED ON	A ME-406455	
			MATERIAL	PLATE, 2" THK., STN. STL. 304	

FERMI NATIONAL ACCELERATOR LABORATORY
UNITED STATES DEPARTMENT OF ENERGY

PPD/MECHANICAL DEPT.
HORN1 ASSY.
SIDE PLATE, LH, MODULE WELDMENT

SCALE	DRAWING NUMBER	SHEET	REV
1/8	8875.111-MC-406372	1 OF 1	A

CREATED WITH : Ideas8m4 | GROUP: PPD/MECHANICAL DEPARTMENT

REV	DESCRIPTION	DRAWN / APPROVED	DATE / DATE
A	ADDED "USED ON" DWG. NO.	B. CYKO	02-26-02

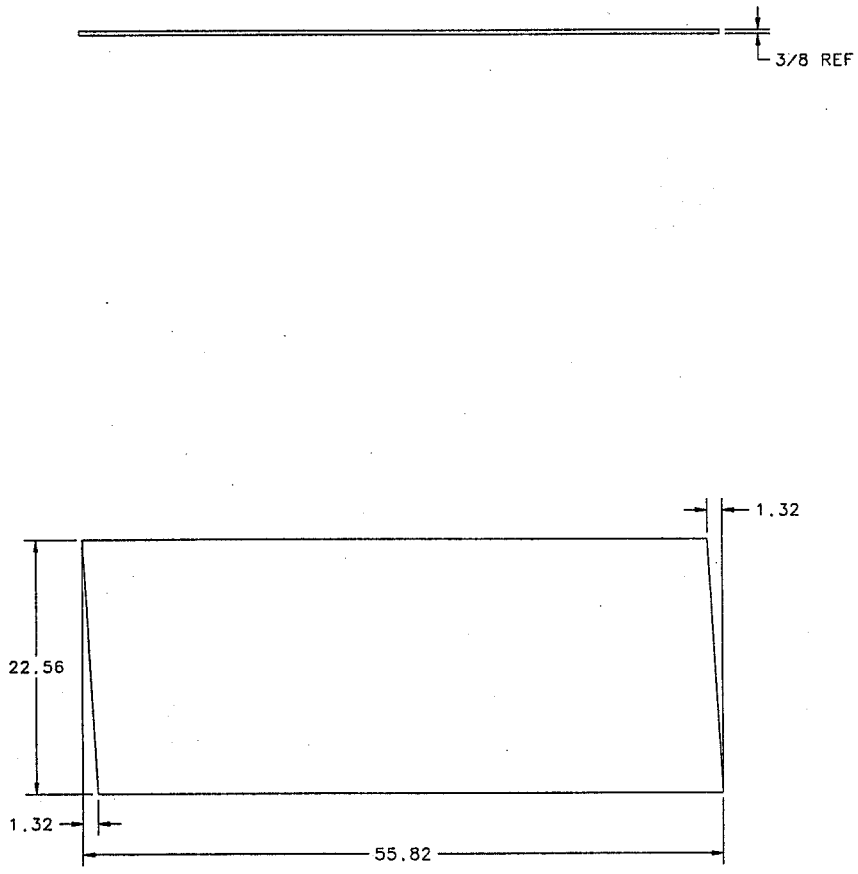

UNLESS OTHERWISE SPECIFIED			ORIGINATOR	R.SILVA	16-OCT-2001
.XX	.XXX	ANGLES	DRAWN	W.CYKO	16-OCT-2001
± .02	±	±	CHECKED	C.NILA	09-NOV-2001
			APPROVED	R.SILVA	09-NOV-2001

1. BREAK ALL SHARP EDGES .015 MAX.
2. DO NOT SCALE DRAWING.
3. DIMENSIONS BASED UPON ANSI Y14.5M-1982
4. MAX. ALL MACH. SURFACES 250

USED ON: A ME-406239

MATERIAL: PLATE, 3/8 THK., CARBON STEEL ASTM A36

FERMI NATIONAL ACCELERATOR LABORATORY
UNITED STATES DEPARTMENT OF ENERGY

PPD/MECHANICAL DEPT.
HORN1 ASSY.
INSIDE PANEL "A", MODULE WELDMENT

SCALE	DRAWING NUMBER	SHEET	REV
1/8	8875.111-MC-406377	1 OF 1	A

CREATED WITH : IdeasBm4 | GROUP: PPD/MECHANICAL DEPARTMENT

REV	DESCRIPTION	DRAWN	DATE
		APPROVED	DATE
A	ADDED "USED ON" DWG. NO.	B. CYKO	02-26-02

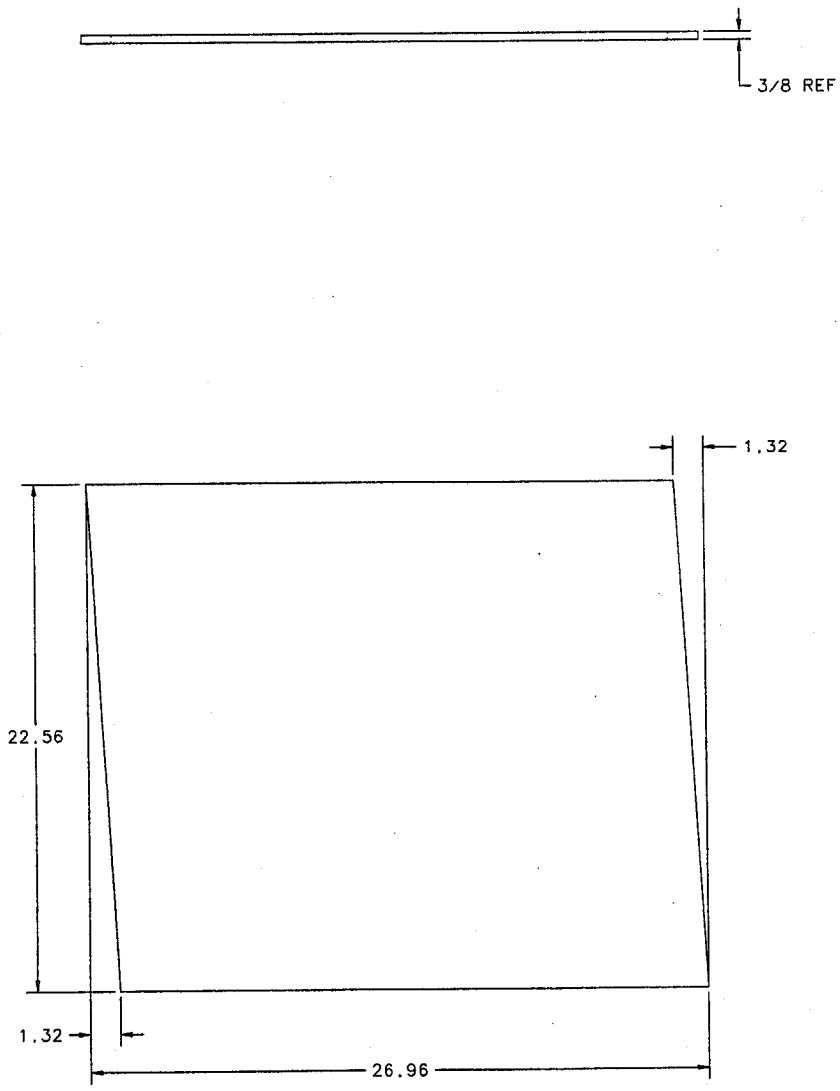

UNLESS OTHERWISE SPECIFIED			ORIGINATOR	R.SILVA	16-OCT-2001
.XX	.XXX	ANGLES	DRAWN	W.CYKO	16-OCT-2001
± .02	±	±	CHECKED	C.NILA	09-NOV-2001
			APPROVED	R.SILVA	09-NOV-2001

1. BREAK ALL SHARP EDGES .015 MAX.
2. DO NOT SCALE DRAWING.
3. DIMENSIONS BASED UPON ANSI Y14.5M-1982
4. MAX. ALL MACH. SURFACES 250

USED ON: A ME-406239

MATERIAL: PLATE, 3/8 THK., CARBON STEEL ASTM A36

FERMI NATIONAL ACCELERATOR LABORATORY
UNITED STATES DEPARTMENT OF ENERGY

PPD/MECHANICAL DEPT.
HORN1 ASSY.
INSIDE PANEL "B", MODULE WELDMENT

SCALE	DRAWING NUMBER	SHEET	REV
1/4	8875.111-MC-406378	1 OF 1	A

CREATED WITH : Ideas8m4 | GROUP: PPD/MECHANICAL DEPARTMENT

REV	DESCRIPTION	DRAWN	DATE
		APPROVED	DATE
A	ADDED "USED ON" DWG. NO.	B. CYKO	02-26-02

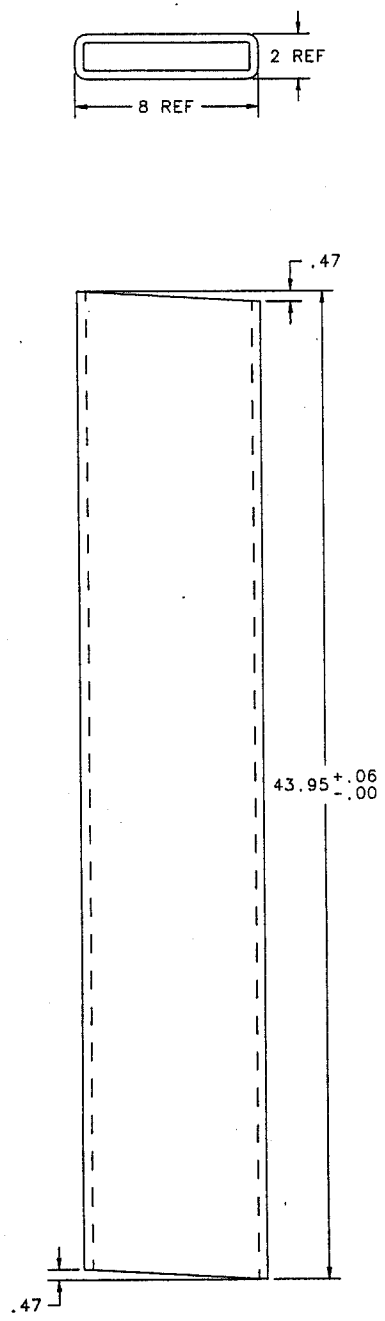

UNLESS OTHERWISE SPECIFIED			ORIGINATOR	R.SILVA	16-OCT-2001
.XX	.XXX	ANGLES	DRAWN	W.CYKO	16-OCT-2001
± .02	±	± 1°	CHECKED	C. NILA	09-NOV-2001
1. BREAK ALL SHARP EDGES .015 MAX. 2. DO NOT SCALE DRAWING. 3. DIMENSIONS BASED UPON ANSI Y14.5M-1982 4. MAX. ALL MACH. SURFACES 250			APPROVED	R. SILVA	09-NOV-2001
			USED ON	(A) ME-406455	
			MATERIAL	8 X 2 X 3/8 WALL RECT. TUBING CARBON STEEL A500 GR. B	

FERMI NATIONAL ACCELERATOR LABORATORY
UNITED STATES DEPARTMENT OF ENERGY

PPD/MECHANICAL DEPARTMENT
HORN1 ASSY.
FRAME TUBE "E", MODULE WELDMENT

SCALE	DRAWING NUMBER	SHEET	REV
1/4	8875.111-MC-406454	1 OF 1	A

CREATED WITH : IdeasBm4 GROUP: PPD/MECHANICAL DEPARTMENT

REV	DESCRIPTION	DRAWN	DATE
		APPROVED	DATE
A	REVISED PLATE CONFIGU. ITEMS 13 AND 14. ADDED.	B. CYKO	02-22-02
		RAFAEL SILVA	02-27-02
B	REVISED LENGTHS: ITEM 1, WAS 82.01.; ITEM 2, WAS 82.72; REV. DIM.: NOW 6.76, WAS 7.48; NOW 8.77; WAS 9.47 NOW 39.38, WAS 40.06	PAT POLL	03-06-02

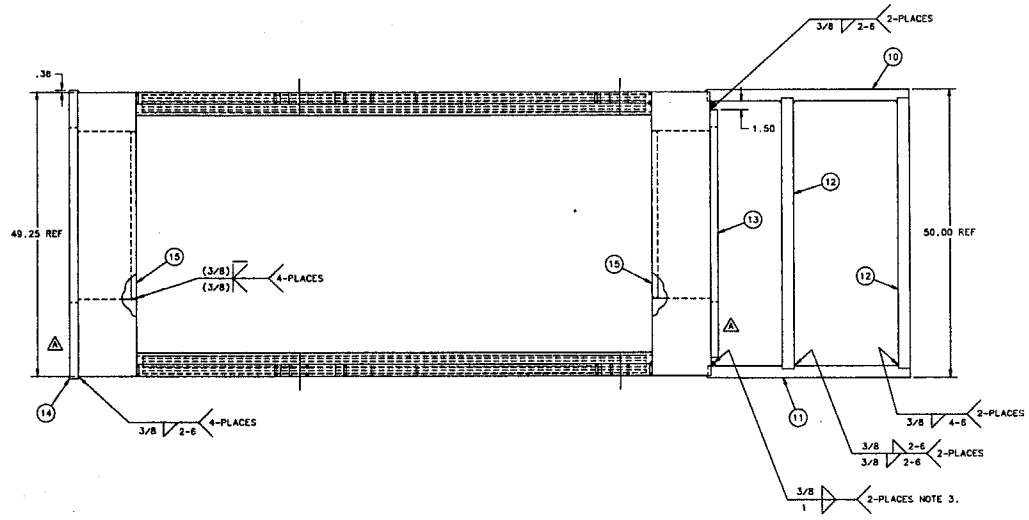

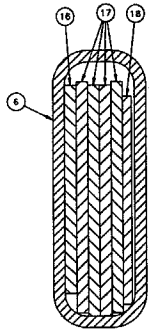

SECTION A-A

SCALE: 1/2

2-PLACES

△A SEE NOTE 4.

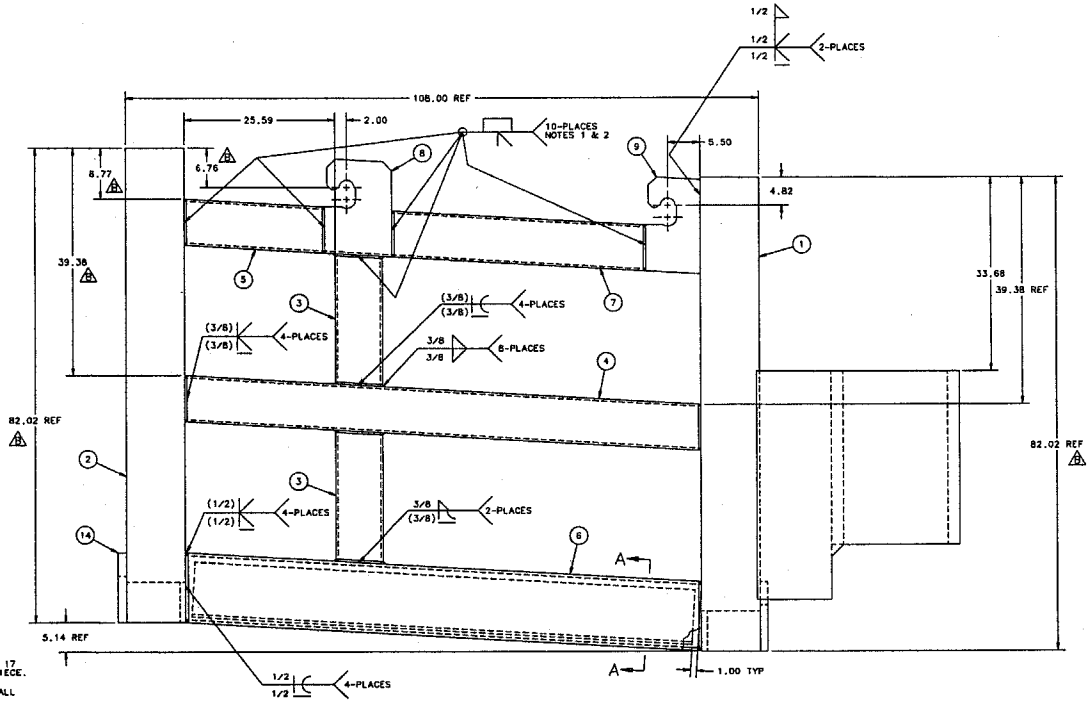

△4. TUBE ITEM 6 AND/OR PLATES ITEMS 16, 17 AND 18 MAY BE REPLACED WITH SOLID PIECE.

3. SURFACE OF CARBON STEEL, ITEM 1, SHALL BE "BUTTERED" WITH ELECTRODE E309 AND WELD SHALL BE COMPLETED WITH ELECTRODE E309 OR E308.

2. PORTION OF WELD LOCATED IN THE OUTSIDE OF STRUCTURE SHALL BE GROUND FLUSH.

1. WELDS AT THESE LOCATIONS ARE TO BE FULL PENETRATION WITH BACKING.

NOTES:

WELD NOTES

FOR ALL WELDS:

-BASE METAL TEMPERATURE SHALL BE 70°F MINIMUM.

-WELD SHOULD NOT START OR END AT CORNER OF SECTIONS.

FOR CARBON STEEL PARTS:

-USE ONLY LOW HYDROGEN ELECTRODE E70XX MINIMUM.

-TUBE JOINTS MUST BE WELDED WITHOUT INTERUPTION. ALL AROUND.

FOR ITEMS 1 AND 2:

-BASE METAL TEMERATURE SHALL BE 225°F MINIMUM.

FOR ITEMS 8 AND 9:

- BASE METAL TEMPERATURE SHALL BE 150°F MINIMUM.

FOR STAINLESS STEEL PARTS (ITEMS 10,11 AND 12):

-USE ELECTRODE 308

-DO NOT PRE-HEAT OR USE INTERPASS HEATING.

ITEM	PART NO.	DESCRIPTION OR SIZE	QTY.
18	COML	FLAT, 3/8 x 9 x 85.50, CF CARBON STEEL 1018	2
17	COML	FLAT, 1/2 x 10 x 85.50, CF CARBON STEEL 1018	8
16	COML	FLAT, 1/2 x 8 x 85.50, CF CARBON STEEL 1018	10
15	COML	PLATE, 1 x 29.25 x 6.98 CARBON STEEL ASTM A36	2
14	MC-406508	SHIELDING PLATE, U.S. MODULE	1
13	MC-406507	SHIELDING PLATE, D.S. MODULE	1
12	COML	PLATE, 3 x 47.00 x 30.00 STAINLESS STEEL 304	2
11	MC-406372	SIDE PLATE, L.H.	1
10	MC-406371	SIDE PLATE, R.H.	1
9	MB-406457	END HOOK	2
8	MB-406456	MIDDLE HOOK	2
7	MC-406454	FRAME TUBE "E"	2
6	MC-406355	FRAME TUBE "D"	2
5	MC-406354	FRAME TUBE "C"	2
4	MC-406353	FRAME TUBE "B"	2
3	MC-406352	FRAME TUBE "A"	4
2	ME-406241	MODULE BLOCK, U.S.	1
1	ME-406240	MODULE BLOCK, D.S.	1

PARTS LIST

UNLESS OTHERWISE SPECIFIED			ORIGINATOR	R.SILVA	23-NOV-2001
.XX	.XXX	ANGLES	DRAWN	B.CYKO	23-NOV-2001
± .03	±	±	CHECKED	C.NILA	13-NOV-2001
1. BREAK ALL SHARP EDGES .010 MAX. 2. DO NOT SCALE DRAWING. 3. DIMENSIONS APPLIED UPON COMPLETION. 4. MAS. ALL UNCH. SURFACES 125			APPROVED	R.SILVA	13-NOV-2001
			USED ON	ME-406230	
			MATERIAL	SEE ABOVE PARTS LIST	

FERMI NATIONAL ACCELERATOR LABORATORY
UNITED STATES DEPARTMENT OF ENERGY

PPD/MECHANICAL DEPT.
HORN1 ASSY.
MODULE WELDMENT

SCALE	DRAWING NUMBER	SHEET	REV
1/8 & AS NOTED	8875.111-ME-406455	1 OF 1	B

CREATED WITH : Intergraph | GROUP: PPD/MECHANICAL DEPARTMENT

REV	DESCRIPTION	DRAWN / APPROVED	DATE / DATE
A	ADDED "USED ON" DWG. NO.	B. CYKO	02-26-02

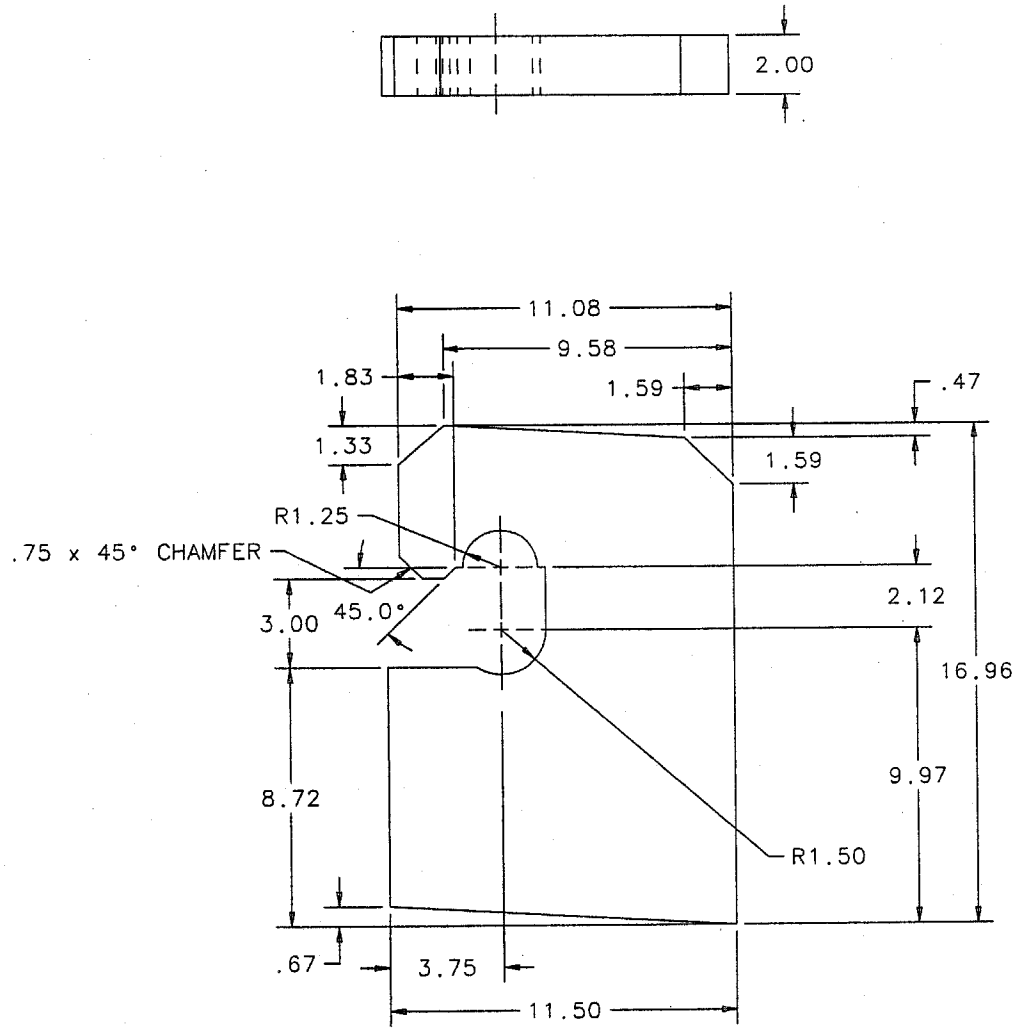

UNLESS OTHERWISE SPECIFIED			ORIGINATOR	R.SILVA	16-OCT-2001
.XX	.XXX	ANGLES	DRAWN	W.CYKO	16-OCT-2001
± .03	±	± 1°	CHECKED	C. NILA	13-NOV-2001
1. BREAK ALL SHARP EDGES .015 MAX. 2. DO NOT SCALE DRAWING. 3. DIMENSIONS BASED UPON ANSI Y14.5M-1982 4. MAX. ALL MACH. SURFACES 125			APPROVED	R. SILVA	13-NOV-2001
			USED ON	A ME-406455	
			MATERIAL	CARBON STEEL ASTM A710 GRADE A CLASS 3 (CERTIFIED)	

FERMI NATIONAL ACCELERATOR LABORATORY
UNITED STATES DEPARTMENT OF ENERGY

PPD/MECHANICAL DEPARTMENT
HORN1 ASSY.
MIDDLE HOOK, MODULE WELDMENT

SCALE	DRAWING NUMBER	SHEET	REV
1/4	8875.111-MB-406456	1 OF 1	A

CREATED WITH : Ideas8m4 GROUP: PPD/MECHANICAL DEPARTMENT

REV	DESCRIPTION	DRAWN	DATE
		APPROVED	DATE
A	ADDED "USE ON" DWG. NO.	B. CYKO	02-26-02

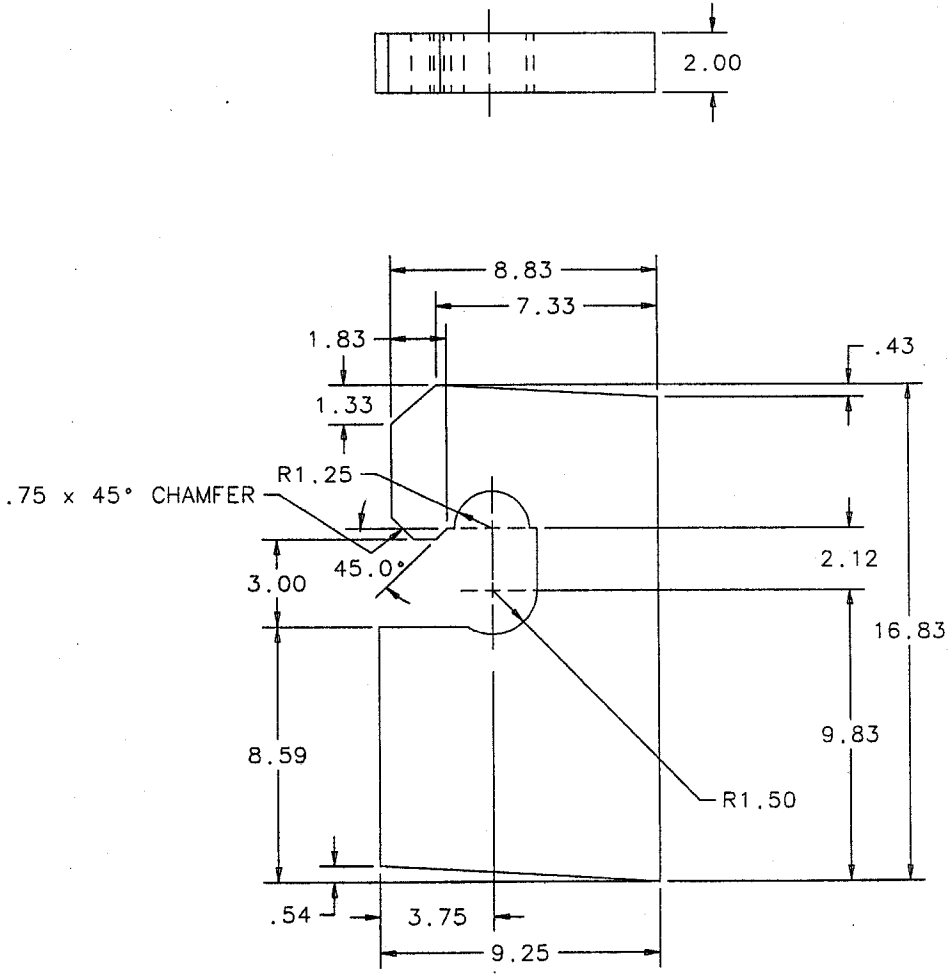

UNLESS OTHERWISE SPECIFIED			ORIGINATOR	R.SILVA	16-OCT-2001
.XX	.XXX	ANGLES	DRAWN	W.CYKO	16-OCT-2001
± .03	±	± 1°	CHECKED	C. NILA	13-NOV-2001
1. BREAK ALL SHARP EDGES .015 MAX. 2. DO NOT SCALE DRAWING. 3. DIMENSIONS BASED UPON ANSI Y14.5M-1982 4. MAX. ALL MACH. SURFACES 125			APPROVED	R. SILVA	13-NOV-2001
			USED ON	A ME-406455	
			MATERIAL	CARBON STEEL ASTM A710 GRADE A CLASS 3 (CERTIFIED)	

FERMI NATIONAL ACCELERATOR LABORATORY
UNITED STATES DEPARTMENT OF ENERGY

PPD/MECHANICAL DEPARTMENT
HORN1 ASSY.
END HOOK, MODULE WELDMENT

SCALE	DRAWING NUMBER	SHEET	REV
1/4	8875.111-MB-406457	1 OF 1	A

CREATED WITH : Ideas8m4 | GROUP: PPD/MECHANICAL DEPARTMENT

REV	DESCRIPTION	DRAWN / APPROVED	DATE
A	REVISED END & SIDE PLA CONFIGURATIONS. REMOVED PLATE. REVISED HOLE & C-3	B. CYKO	02-25-02
		RAFAEL SILVA	02-27-02
B	REVISED GEOMETRIC TOLERANCE WAS PARALLELISM; REVISED RIGHT BLOCK HEIGHT. WAS 82.01; REVISED LEFT BLOCK HEIGHT. WAS 82.72	PAT POLL	03-05-02

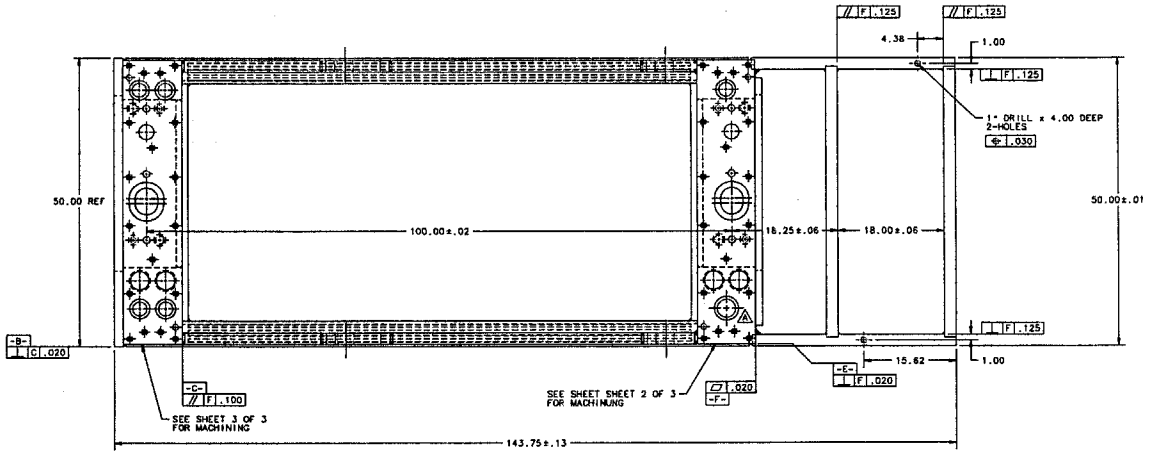

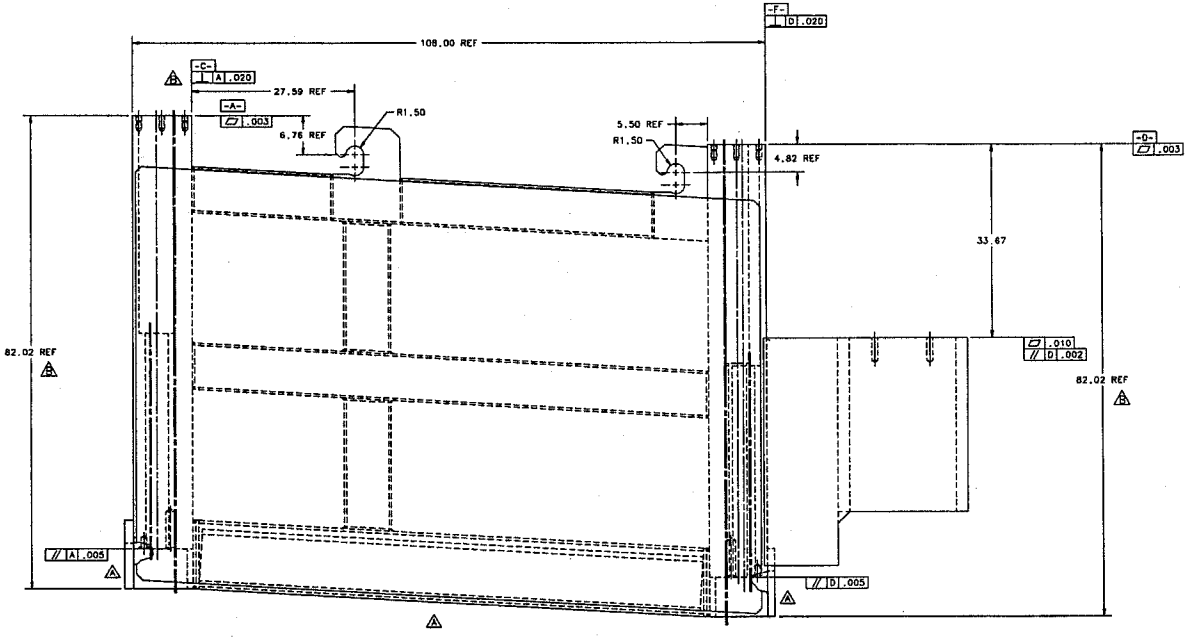

NOTE: 1. TOP ARC OF HOOKS TO BE IN TRUE POSITION WITHIN .030 M.M.C. IN RELATION TO DATUM SURFACES A, B AND C.

2. APPROX. WT. = 15 TONS.

UNLESS OTHERWISE SPECIFIED			ORIGINATOR	R.SILVA 05-NOV-2001
.XX	.XXX	ANGLES	DRAWN	W.CYKO 05-NOV-2001
± .02	±	±	CHECKED	G.MILA 13-NOV-2001
1. BREAK ALL SHARP EDGES .015 MAX.			APPROVED	R.SILVA 13-NOV-2001
2. DO NOT SCALE DRAWING.			USED ON	ME-406508
3. DIMENSIONS BASED UPON ANSI Y14.5M-1982			MATERIAL	MAKE FROM ME-406230
4. RMS. ALL MACH. SURFACES 125				

FERMI NATIONAL ACCELERATOR LABORATORY
UNITED STATES DEPARTMENT OF ENERGY

PPD/MECHANICAL DEPT.
HORN1 ASSY.
MODULE MACHINING

SCALE	DRAWING NUMBER	SHEET	REV
1/8	8875.111-ME-406491	1 OF 3	B

CREATED WITH : Intesa Bmd GROUP: PPD/MECHANICAL DEPARTMENT

REV	DESCRIPTION	DRAWN / APPROVED	DATE
A	CHANGED Ø3.375 THRU TO CHANGED Ø3.375 C-BORE TO C-BORE, ONE PLACE ONLY!	B. CYKO	02-25-02
		RAFAEL SILVA	02-27-02
B	REVISED SHEET 1 & 3	PAT POLL	03-06-02
		RAFAEL SILVA	03-06-02

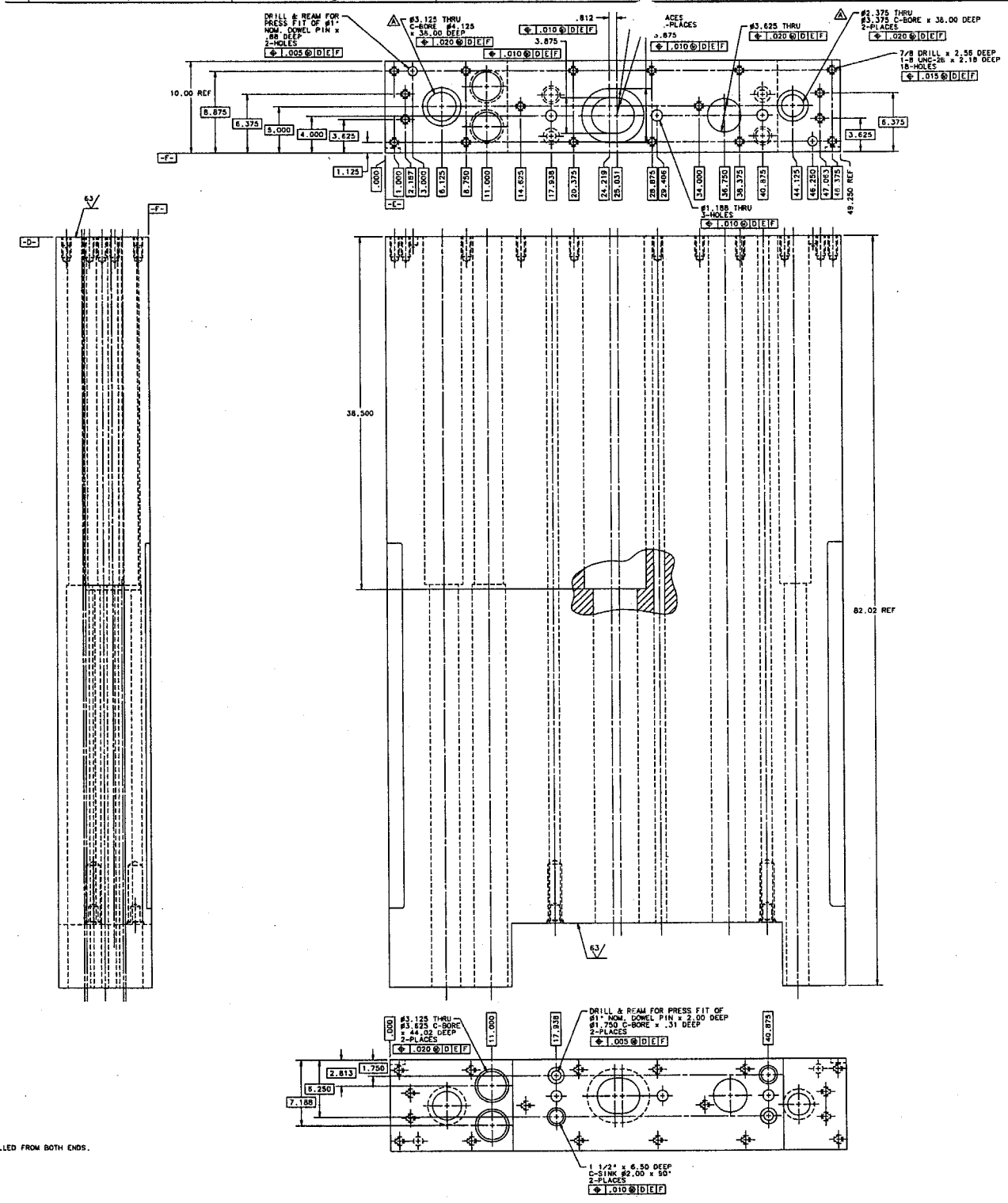

1. HOLES MAY BE GUN DRILLED FROM BOTH ENDS.

NOTES:

UNLESS OTHERWISE SPECIFIED	ORIGINATOR	R.SILVA	08-NOV-2001
.XX .XXX HOLES	DRAWN	W.CYKO	08-NOV-2001
± .01 ± .005 ± 1°	CHECKED	C.MILA	13-NOV-2001
1. BREAK ALL SHARP EDGES .015 MAX. 2. DO NOT SCALE DRAWING. 3. DIMENSIONS BASED UPON ANSI Y14.5M-1982 4. MAX. ALL MACH. SURFACES 125	APPROVED	R.SILVA	13-NOV-2001
	USED ON	ME-406481 SHEET 1OF 3	
	MATERIAL	MADE FROM ME-408240 AFTER WELDING	

FERMI NATIONAL ACCELERATOR LABORATORY
UNITED STATES DEPARTMENT OF ENERGY

PPD/MECHANICAL DEPARTMENT
HORN1 ASSY.
DS MODULE BLOCK MACHINING

SCALE	DRAWING NUMBER	SHEET	REV
1/4	8875.111-ME-406491	2 OF 3	B

CREATED WITH : Intergraph GROUP: PPD/MECHANICAL DEPARTMENT

REV	DESCRIPTION	DRAWN	DATE
		APPROVED	DATE
A	ADDED "USED ON" L	B. CYKO	02-26-02
		RAFAEL SILVA	02-27-02
B	REVISED OVERALL HEIGHT, WAS 82.72	PAT POLL	03-05-02

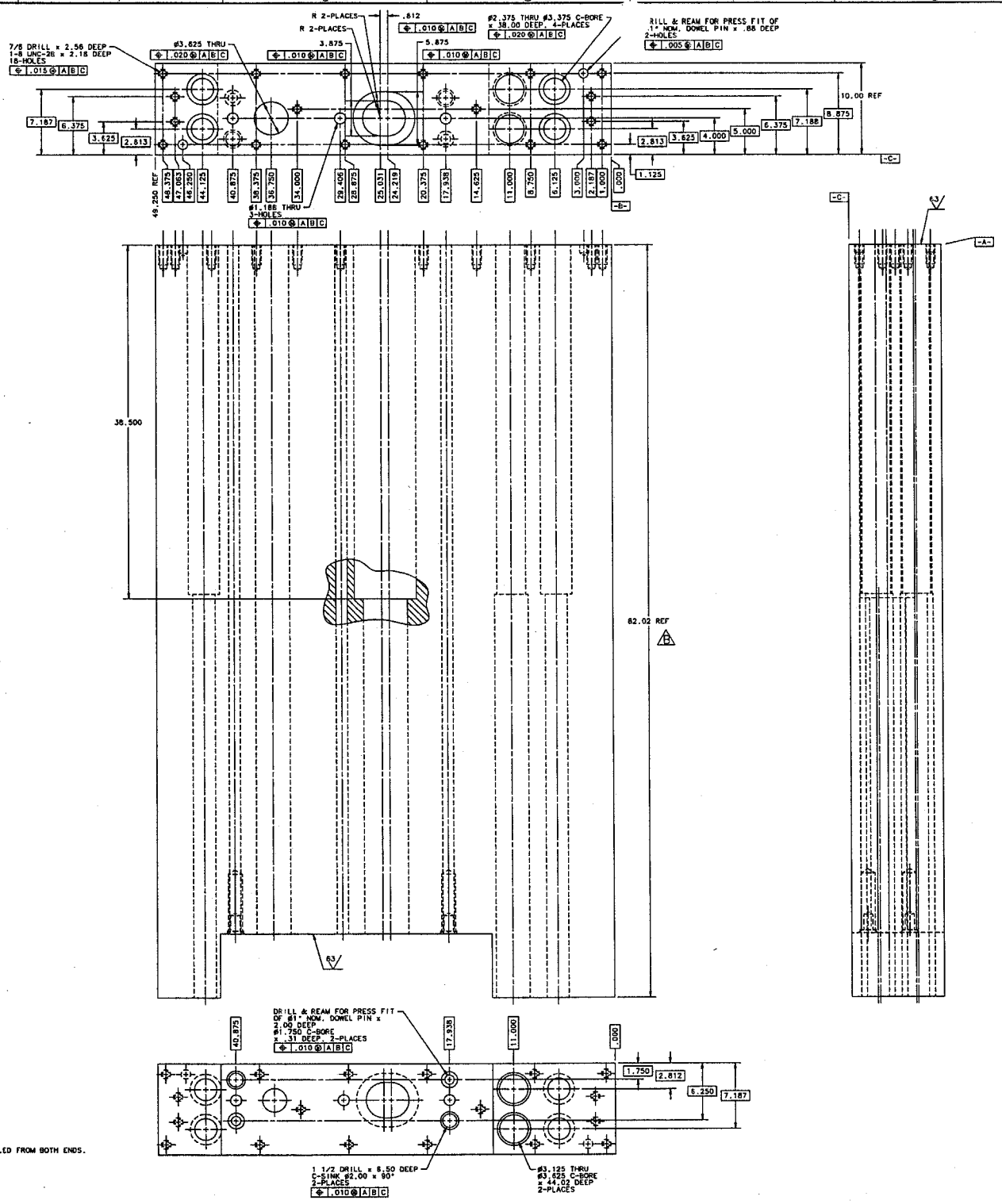

NOTES:

1. HOLES MAY BE GUN DRILLED FROM BOTH ENDS.

UNLESS OTHERWISE SPECIFIED	ORIGINATOR	R.SILVA	08-OCT-2001
.XX .XXX ANGLES	DRAWN	W.CYKO	08-OCT-2001
± .01 ± .005 ± 1°	CHECKED	C. NILA	13-NOV-2001
1. BREAK ALL SHARP EDGES .015 R MAX.	APPROVED	R. SILVA	13-NOV-2001
2. DO NOT SCALE DRAWING.	USED ON	ME-406481 SHEET 1 OF 3	
3. DIMENSIONS BASED UPON ANSI Y14.5M-1982	MATERIAL	MAKE FROM ME-406241 AFTER WELDING	
4. MAX. ALL MACH. SURFACES 125			

FERMI NATIONAL ACCELERATOR LABORATORY
UNITED STATES DEPARTMENT OF ENERGY

PPD/MECHANICAL DEPARTMENT
HORN1 ASSY.
US MODULE BLOCK MACHINIHG

SCALE	DRAWING NUMBER	SHEET	REV
1/4	8875.111-ME-406491	3 OF 3	B

CREATED WITH : Fidesys/Bmt GROUP: PPD/MECHANICAL DEPARTMENT

REV	DESCRIPTION	DRAWN	DATE
A	REVISED END PLATE COMP'T REMOVED BOTTOM PLATE, REVISED HOLE & CHAMF DIA.	B. CYKO	02-25-02
		APPROVED	DATE

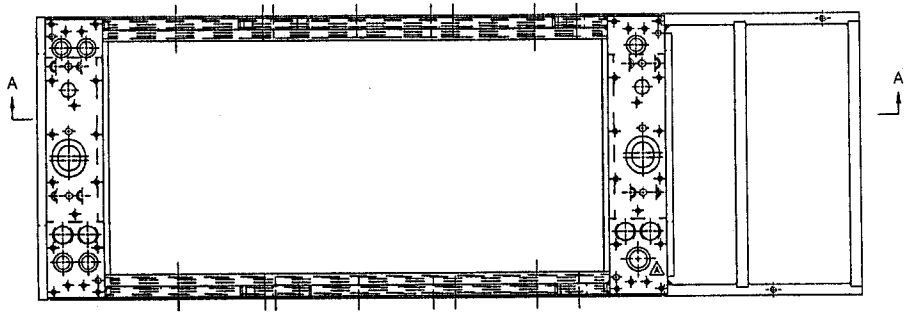

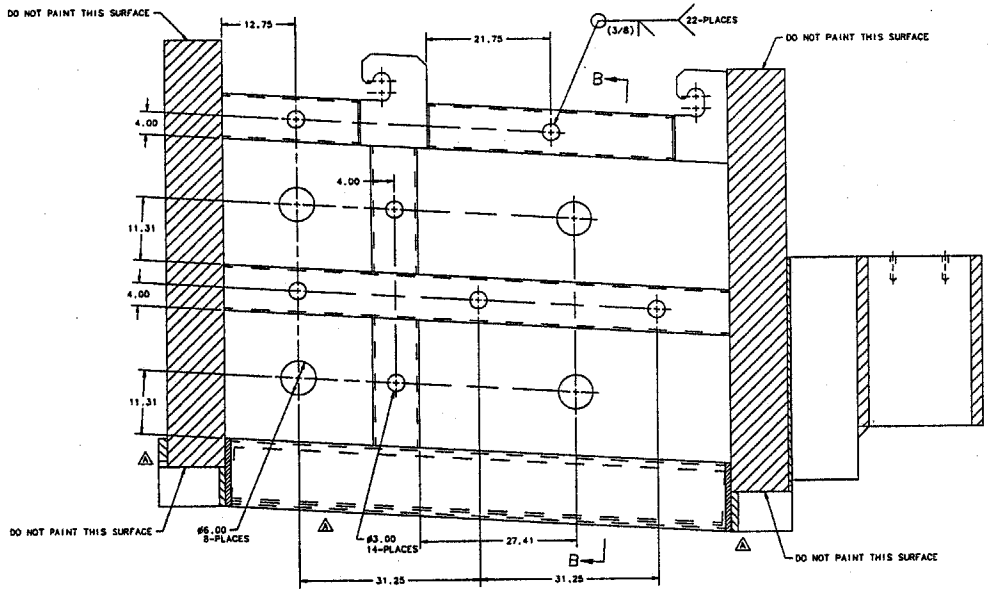

SECTION A-A

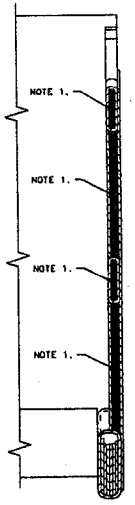

SECTION B-B

SEE NOTE 2.

NOTES:

5. EXCEPT WHERE NOTED, ALL CARBON STEEL PARTS SHOULD BE PRIMED AND PAINTED.
4. PLUGS TO BE CUT AND WELDED BACK TO INTERNAL SURFACES OF SIDE WALLS.
3. THE SIZE, QUANTITY AND LOCATION OF HOLES/PLUGS MAY BE CHANGED IF APPROVED BY FERMILAB.
2. HOLES ARE NOT REQUIRED IF AREAS ARE FILLED BEFORE CLOSED.
1. THIS AREA TO BE FILLED WITH UNISORB V-1 NON-SHRINK GROUT.

UNLESS OTHERWISE SPECIFIED			ORIGINATOR	R.SILVA	12-NOV-2001
.XX	.XXX	ANGLES	DRAWN	R.CYKO	12-NOV-2001
±	±	±	CHECKED	C.MILA	13-NOV-2001
1. BREAK ALL SHARP EDGES .010 MAX. 2. DO NOT SCALE DRAWING. 3. DIMENSIONS BASED UPON SHEET 111-SA-1040. 4. MAX. ALL WORK. SURFACES			APPROVED	R.SILVA	13-NOV-2001
			USED ON	ME-406697	
			MATERIAL	MAKE FROM ME-406491	

FERMI NATIONAL ACCELERATOR LABORATORY
UNITED STATES DEPARTMENT OF ENERGY

PPD/MECHANICAL DEPT.
HORN1 ASSY.
MODULE GROUTING AND PAINTING

SCALE	DRAWING NUMBER	SHEET	REV
1=8	8875.111-ME-406505	1 OF 1	A

CREATED WITH : Intergraph | GROUP: PPD/MECHANICAL DEPARTMENT

REV	DESCRIPTION	DRAWN / APPROVED	DATE / DATE
A	REVISED PLATE THICKNESS FROM 5/8 TO 1 1/4. REVISED HEIGHT FROM 48.00 TO 12.00.	B. CYKO	02-22-02

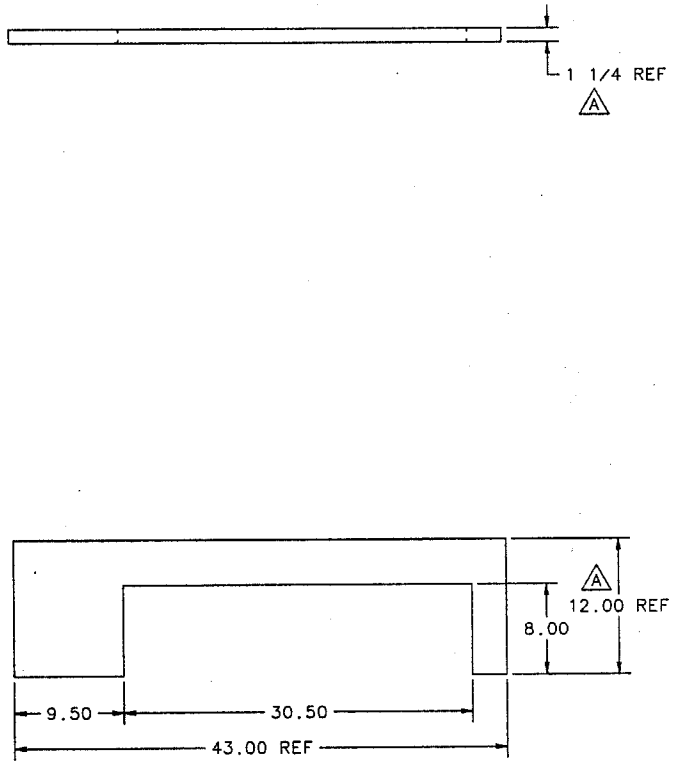

UNLESS OTHERWISE SPECIFIED			ORIGINATOR	R.SILVA	09-NOV-2001
.XX	.XXX	ANGLES	DRAWN	W.CYKO	09-NOV-2001
± .06	±	±	CHECKED	C. NILA	09-NOV-2001
			APPROVED	R. SILVA	09-NOV-2001

1. BREAK ALL SHARP EDGES .015 MAX.
2. DO NOT SCALE DRAWING.
3. DIMENSIONS BASED UPON ANSI Y14.5M-1982
4. MAX. ALL MACH. SURFACES 250

USED ON: ME-406455

MATERIAL: PLATE, 1 1/4 X 12.00 CARBON STEEL ASTM A36

FERMI NATIONAL ACCELERATOR LABORATORY
UNITED STATES DEPARTMENT OF ENERGY

PPD/MECHANICAL DEPT.
HORN1 ASSY.
SHIELDING PLATE, DS MODULE BLOCK

SCALE	DRAWING NUMBER	SHEET	REV
1/8	8875.111-MC-406507	1 OF 1	A

CREATED WITH : IdeasBm4 | GROUP: PPD/MECHANICAL DEPARTMENT

REV	DESCRIPTION	DRAWN	DATE
		APPROVED	DATE
A	REVISED PLATE THICKNESS FROM 5/8 TO 1 1/2. REVISED HEIGHT FROM 48.00 TO 12.00.	B. CYKO	02-22-02

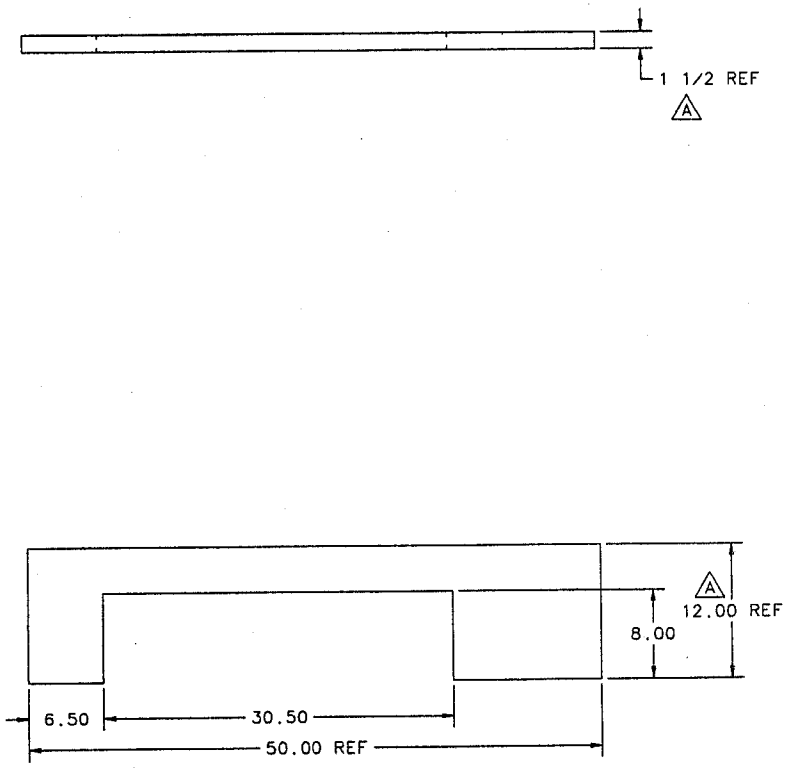

UNLESS OTHERWISE SPECIFIED			ORIGINATOR	R.SILVA	09-NOV-2001
.XX	.XXX	ANGLES	DRAWN	W.CYKO	09-NOV-2001
± .06	±	±	CHECKED	C.NILA	09-NOV-2001
			APPROVED	R.SILVA	09-NOV-2001

1. BREAK ALL SHARP EDGES .015 MAX.
2. DO NOT SCALE DRAWING.
3. DIMENSIONS BASED UPON ANSI Y14.5M-1982
4. MAX. ALL MACH. SURFACES 250

USED ON: ME-406455

MATERIAL: PLATE, 1 1/2 X 12.00, CARBON STEEL ASTM A36

FERMI NATIONAL ACCELERATOR LABORATORY
UNITED STATES DEPARTMENT OF ENERGY

PPD/MECHANICAL DEPT.
HORN1 ASSY.
SHIELDING PLATE, US MODULE BLOCK

SCALE	DRAWING NUMBER	SHEET	REV
1/8	8875.111-MC-406508	1 OF 1	A

CREATED WITH : Ideas8m4 | GROUP: PPD/MECHANICAL DEPARTMENT