I-DEAS 8 m4: PARTICLE PHYSICS DIVISION : USER.rafael : /cadwhs/server03/ms_ra 10-Dec-01 14:05:55

Database: /cadwhs/server03/ms_rafael/horn1_module.mf1
View : 1, 1
Task : Post Processing
Model: module_w_ss_slb Active Study: DEFAULT FE STUDY

Units : IN
Display : none, none
Model/Part Bin: Main
Parent Part: module_w_ss_slb

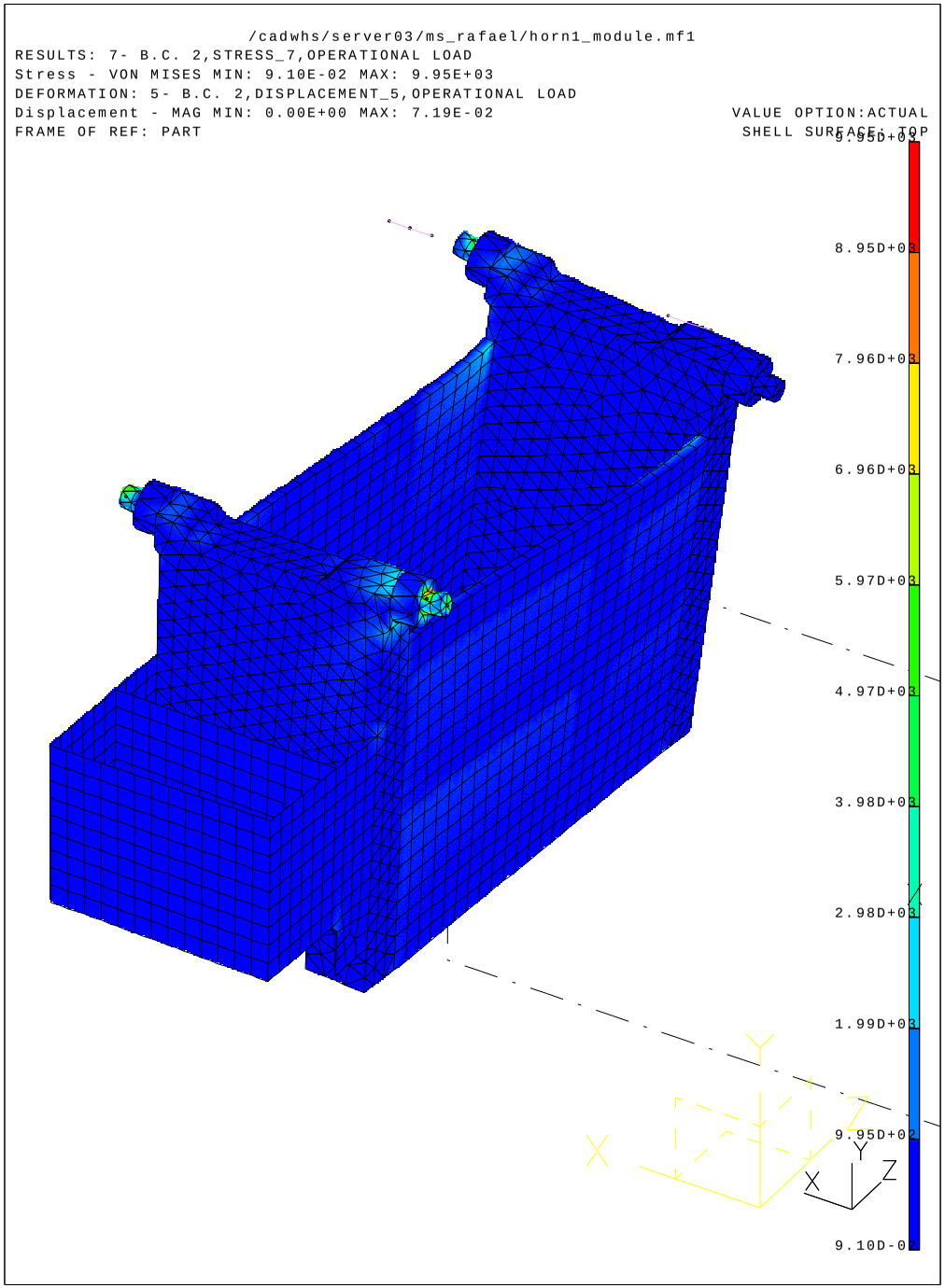

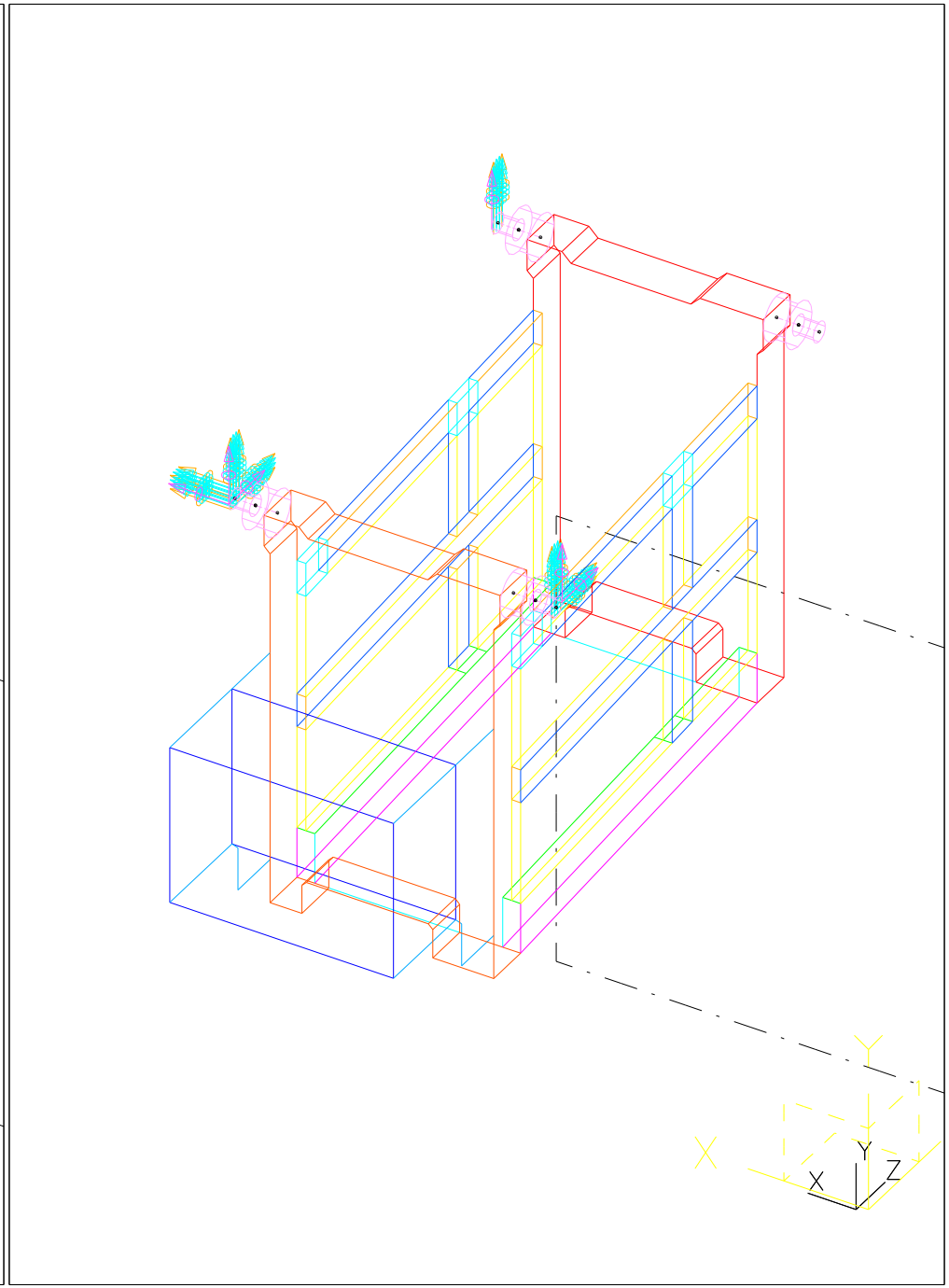

Plotted by rafael on 10-Dec-01 , File: horn1_module_arm_3_vm.pff