DESCRIPTION: BLOCK, END UPPER MAGNET W/HOLE
CATEGORY: BLOCK PROJECT: ProjectXInjectorExperiment

REV	REVISION CONTROL DOCUMENT	DATES	SIGNATURES	
-	F10002143---RCD		DRAWN	
			APPROVED	

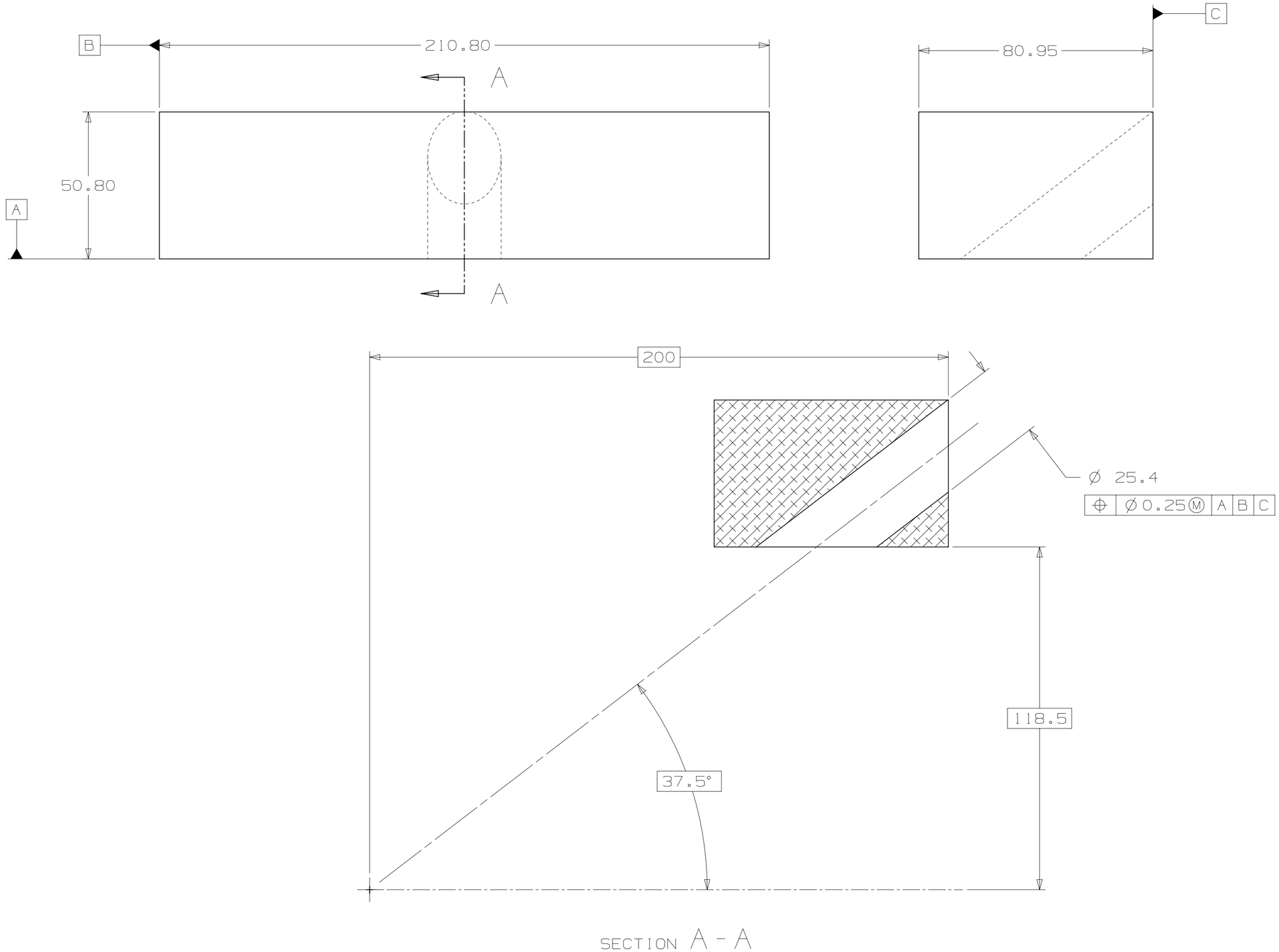

UNLESS OTHERWISE SPECIFIED				
±X	±X.X	±X.XX	±X/X	±X°
--	0.3	0.12	N/A	1°

BREAK ALL SHARP EDGES .015 MAX.
DO NOT SCALE DRAWING
DIMENSIONS BASED ON ASME Y14.5M-1994
MAX. ALL MACH SURFACES 3.2
DRAWING UNITS: MM

DRAWN	N.TANOVIC	DATE	11-Oct-2012
CHECKED		DATE	
APPROVED		DATE	

USED ON F10001726

MATERIAL 6061-T6 ALUMINUM, UNS A96061

GROUP: Technical Division Design and Drafting | CAGE CODE: 0U5R6

FERMI NATIONAL ACCELERATOR LABORATORY
UNITED STATES DEPARTMENT OF ENERGY

NAME
BLOCK, END UPPER MAGNET W/HOLE

SCALE	SIZE	DRAWING NUMBER	SHEET	REV
1:1 AS SHOWN	A2	F10002143	1 OF 1	-